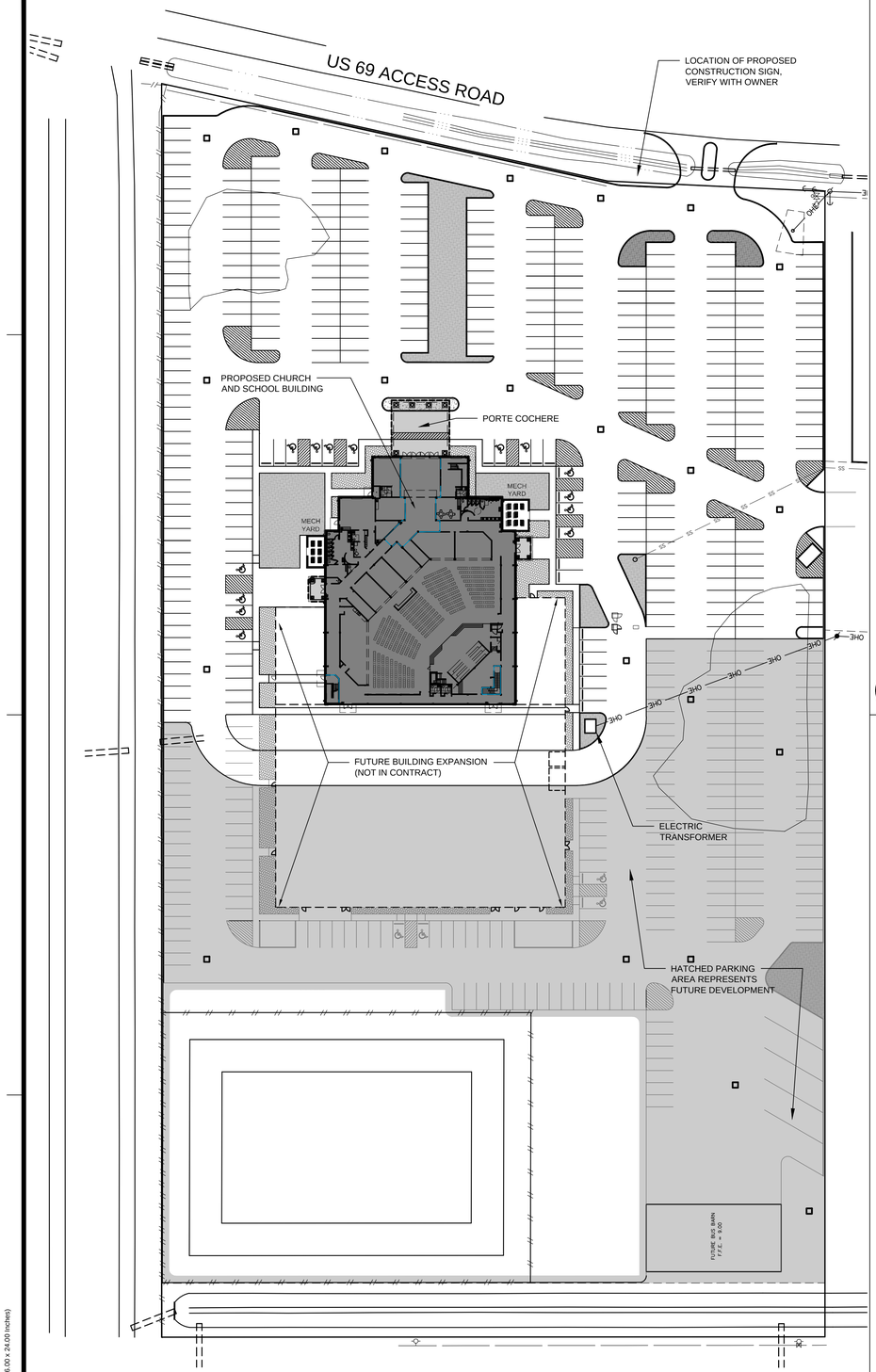

1 SITE PLAN (FOR REFERENCE ONLY), REF. CIVIL SITE PLAN
SCALE: 1"=50'-0"

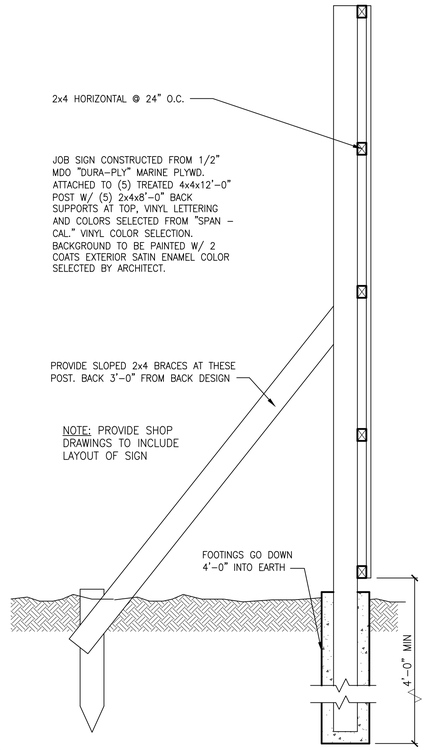

2 CONSTRUCTION SIGN
SCALE: 1"=1'-0"

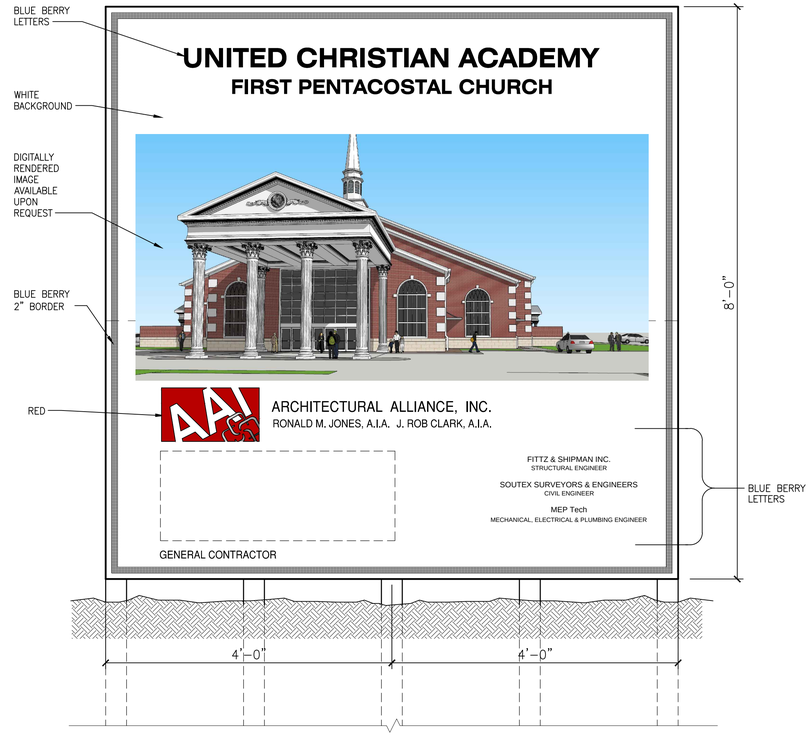

Architectural Alliance Incorporated
350 Pine Street, Suite 720
Ednco Plaza
Beaumont, Texas 77701
TEL (409) 866-7196
FAX (409) 866-1745
J. ROB CLARK, A.I.A.
RONALD M. JONES, A.I.A.
www.archtxcall.com

REGISTERED ARCHITECT JAMES R. CLARK 8212 STATE OF TEXAS
8/16/2021

REGISTERED ARCHITECT RONALD M. JONES 13662 STATE OF TEXAS
8/16/2021

UNITED CHRISTIAN ACADEMY
First Pentecostal Church
10619 Highway 69
Port Arthur, TX 77642

ISSUED FOR
SCHEMATIC DESIGN [X]
DATE: 10/6/2020
DESIGN DEVELOPMENT [X]
DATE: 3/5/2021
BIDS & CONSTRUCTION [X]
DATE: 8/2/2021
REVISION:
DATE:
REVISION:
DATE:
REVISION:
DATE:

DRAWINGS SHEET TITLE
SITE PLAN

SHEET NUMBER
A100

20105
PROJECT NUMBER

OWNERSHIP OF DRAWINGS THIS DOCUMENT AND THE IDEAS AND DESIGNS INCORPORATED HEREIN, AS AN INSTRUMENT OF PROFESSIONAL SERVICES, IS THE PROPERTY OF ARCHITECTURAL ALLIANCE INCORPORATED AND IS NOT TO BE USED, IN WHOLE OR IN PART, FOR ANY OTHER PROJECT WITHOUT THE WRITTEN AUTHORIZATION OF ARCHITECTURAL ALLIANCE INCORPORATED. © COPYRIGHT 2021

SAVED: LEOT
PLOT: LEO TAN
PLOT DATE: 8/16/2021 1:53 PM
SHEET SIZE: ARCH expand D (36.00 x 24.00 Inches)

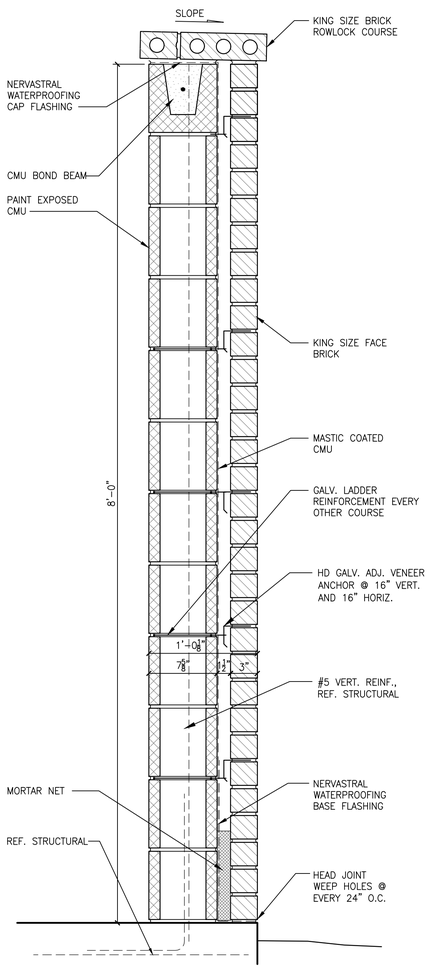

11 MECHANICAL YARD ENCLOSURE - SECTION

SCALE: 1 1/2" = 1'-0"

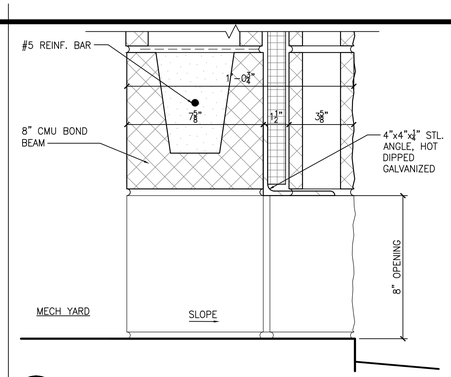

2 MECH. YARD AIR INLET - SECTION

SCALE: 3/4" = 1'-0"

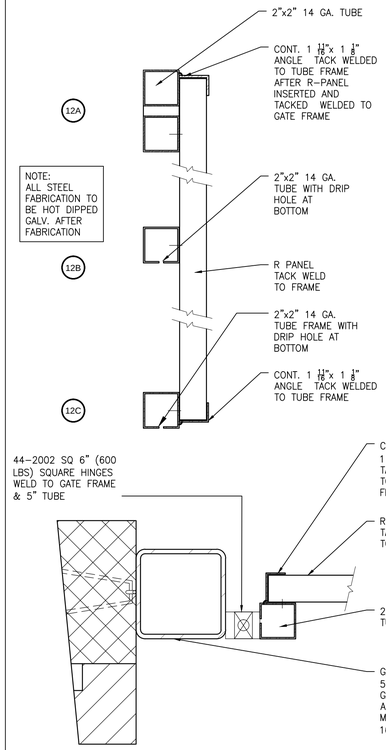

12 COLUMN DETAIL-PLAN

SCALE: 3" = 1'-0"

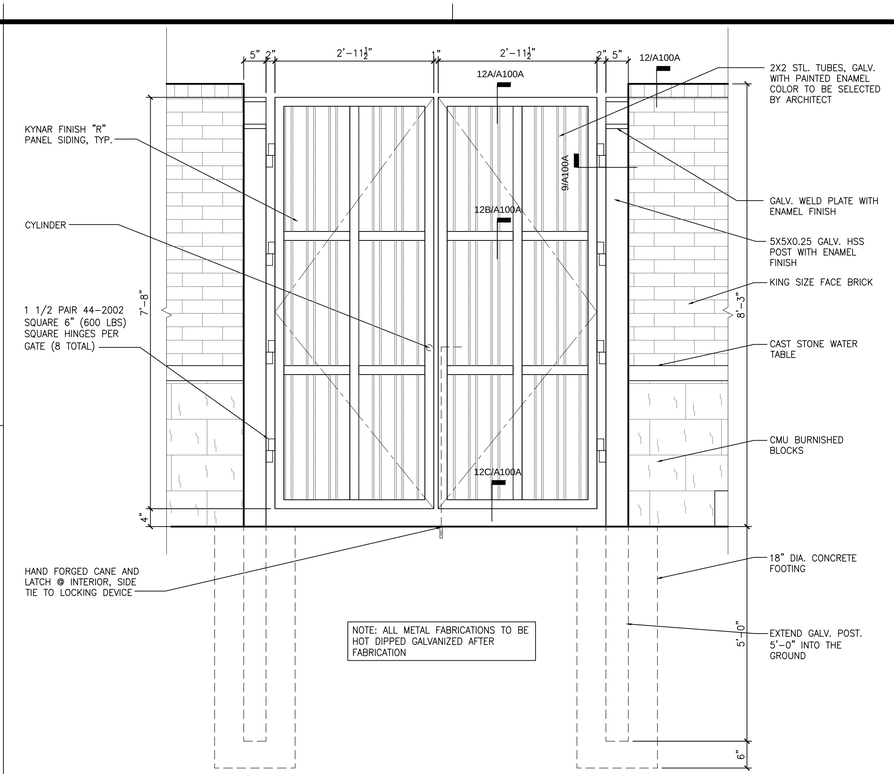

8 MECH. YARD ENCLOSURE - ELEVATION

SCALE: 3/4" = 1'-0"

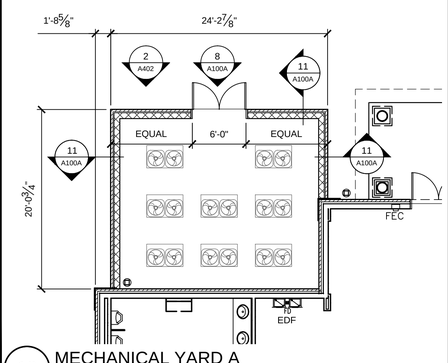

13 MECHANICAL YARD A

SCALE: 1/8" = 1'-0"

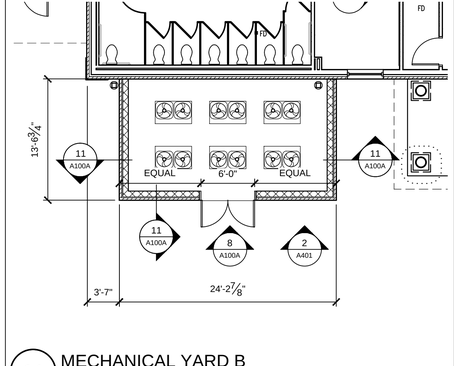

14 MECHANICAL YARD B

SCALE: 1/8" = 1'-0"

UNITED CHRISTIAN ACADEMY

FIRST PENTACOSTAL CHURCH

DARRELL McCOY
SENIOR PASTOR

NATHAN McCOY
PASTOR

ARCHITECTURAL ALLIANCE, INC.
RONALD M. JONES, AIA J. ROB CLARK, AIA

GENERAL CONTRACTOR
GENERAL CONTRACTOR

2022

GOTHIC ENGRAVED CHARACTERS. PROVIDE SCALED LAYOUT & RUBBING TO ARCHITECT FOR APPROVAL

LEATHERETTE BACKGROUND

POLISHED BEVELED EDGE

3'-0"

2'-0"

NOTE:
1. CONTRACTOR TO VERIFY ALL TEXT AND MUST BE SIGNED AND APPROVED BY FIRST PENTECOSTAL CHURCH.
2. INSTALL IN LOCATION AS DIRECTED BY ARCHITECT.

Architectural Alliance Incorporated
350 Pine Street, Suite 720
Ednoor Plaza
Beaumont, Texas 77701
TEL (409) 866-7196
FAX (409) 866-1745
J. ROB CLARK, A.I.A.
RONALD M. JONES, A.I.A.
www.architectall.com

REGISTERED ARCHITECT JAMES R. CLARK 8212 STATE OF TEXAS
8/16/2021

REGISTERED ARCHITECT RONALD M. JONES 13662 STATE OF TEXAS
8/16/2021

UNITED CHRISTIAN ACADEMY
First Pentecostal Church
10619 Highway 69
Port Arthur, TX 77642

ISSUED FOR
SCHEMATIC DESIGN [X]
DATE: 10/6/2020
DESIGN DEVELOPMENT [X]
DATE: 3/5/2021
BIDS & CONSTRUCTION [X]
DATE: 8/2/2021
REVISION:
DATE:
REVISION:
DATE:
REVISION:
DATE:

DRAWINGS SHEET TITLE
SITE DETAILS

SHEET NUMBER
A100A

20105
PROJECT NUMBER

OWNERSHIP OF DRAWINGS THIS DOCUMENT AND THE IDEAS AND DESIGNS INCORPORATED HEREIN, AS AN INSTRUMENT OF PROFESSIONAL SERVICES, IS THE PROPERTY OF ARCHITECTURAL ALLIANCE INCORPORATED AND IS NOT TO BE USED, IN WHOLE OR IN PART, FOR ANY OTHER PROJECT WITHOUT THE WRITTEN AUTHORIZATION OF ARCHITECTURAL ALLIANCE INCORPORATED. © COPYRIGHT 2021

SAVED: LEOT
PLOT: LEO TAN
PLOT DATE: 8/16/2021 1:54 PM
SHEET SIZE: ARCH expand D (36.00 x 24.00 inches)

MECHANICAL COURTYARD A, REF. 13/A101A

MECHANICAL COURTYARD B, REF. 14/A101A

PORTE COCHERE 100
VESTIBULE 101
WELCOME CENTER 103
RESTROOM-MEN 104
SHELL SPACE 105
BOOK ROOM 106
NURSERY 108
TODDLER 109
RESTROOM-WOMEN 112
BRIDE'S ROOM 114
SPKLR 115
JAN 116
CORRIDOR 1 116
CORRIDOR 2 117
CLASSROOM 118
CLASSROOM 119
CLASSROOM 120
CLASSROOM 121
CLASSROOM 122
SHELL SPACE 124
CORRIDOR 5 125
STAIR 1 126
CORRIDOR 4 127
WALKWAY 129
WALKWAY 130
PODIUM 132
AUDITORIUM 131
BAPTISTRY 134
ADA TLT 135
ADA TLT 136
STAIR 2 140
REFRESH STN. 139
ELECT. 143
STORAGE 141
PRAYER ROOM 137
CHOIR 133
LIFT 142
CORRIDOR 3 128
SOUND BOOTH 115
STAIR 3 102

PROVIDE PLUMBING AND ELECT.

LINE OF ATRIUM STAIR LANDING ABOVE

3/4" PLYWOOD OVER 2X12 FLOOR JOIST @ 16" O.C. REF. STRUCTURAL

PORTABLE RISERS WITH GUARDS BY OWNER

30"Wx14"H ACCESS PANEL

135 SEATS
129 SEATS
117 SEATS

FIRST FLOOR PLAN

1 FIRST FLOOR PLAN
SCALE: 1/8" = 1'-0"

CALLED NORTH

OWNERSHIP OF DRAWINGS THIS DOCUMENT AND THE IDEAS AND DESIGNS INCORPORATED HEREIN, AS AN INSTRUMENT OF PROFESSIONAL SERVICES, IS THE PROPERTY OF ARCHITECTURAL ALLIANCE INCORPORATED AND IS NOT TO BE USED, IN WHOLE OR IN PART, FOR ANY OTHER PROJECT WITHOUT THE WRITTEN AUTHORIZATION OF ARCHITECTURAL ALLIANCE INCORPORATED. © COPYRIGHT 2021

SAVED: LEOT
PLOT: LEO TAN
PLOT DATE: 8/16/2021 1:54 PM
SHEET SIZE: ARCH expand D (36.00 x 24.00 Inches)

Architectural Alliance Incorporated
350 Pine Street, Suite 720
Ellison Plaza
Beaumont, Texas 77701
TEL (409) 866-7196
FAX (409) 866-1745
J. ROSS CLARK, A.I.A.
RONALD M. JONES, A.I.A.
www.archtxalliance.com

REGISTERED ARCHITECT JAMES R. CLARK 8212 STATE OF TEXAS
8/16/2021

REGISTERED ARCHITECT RONALD M. JONES 13662 STATE OF TEXAS
8/16/2021

UNITED CHRISTIAN ACADEMY
First Pentecostal Church
10619 Highway 69
Port Arthur, TX 77642

ISSUED FOR
SCHEMATIC DESIGN X
DATE: 10/6/2020
DESIGN DEVELOPMENT X
DATE: 3/5/2021
BIDS & CONSTRUCTION X
DATE: 8/2/2021
REVISION:
DATE:
REVISION:
DATE:
REVISION:
DATE:

DRAWINGS SHEET TITLE
FIRST FLOOR PLAN
REF. ADD #2

SHEET NUMBER
A101

20105
PROJECT NUMBER

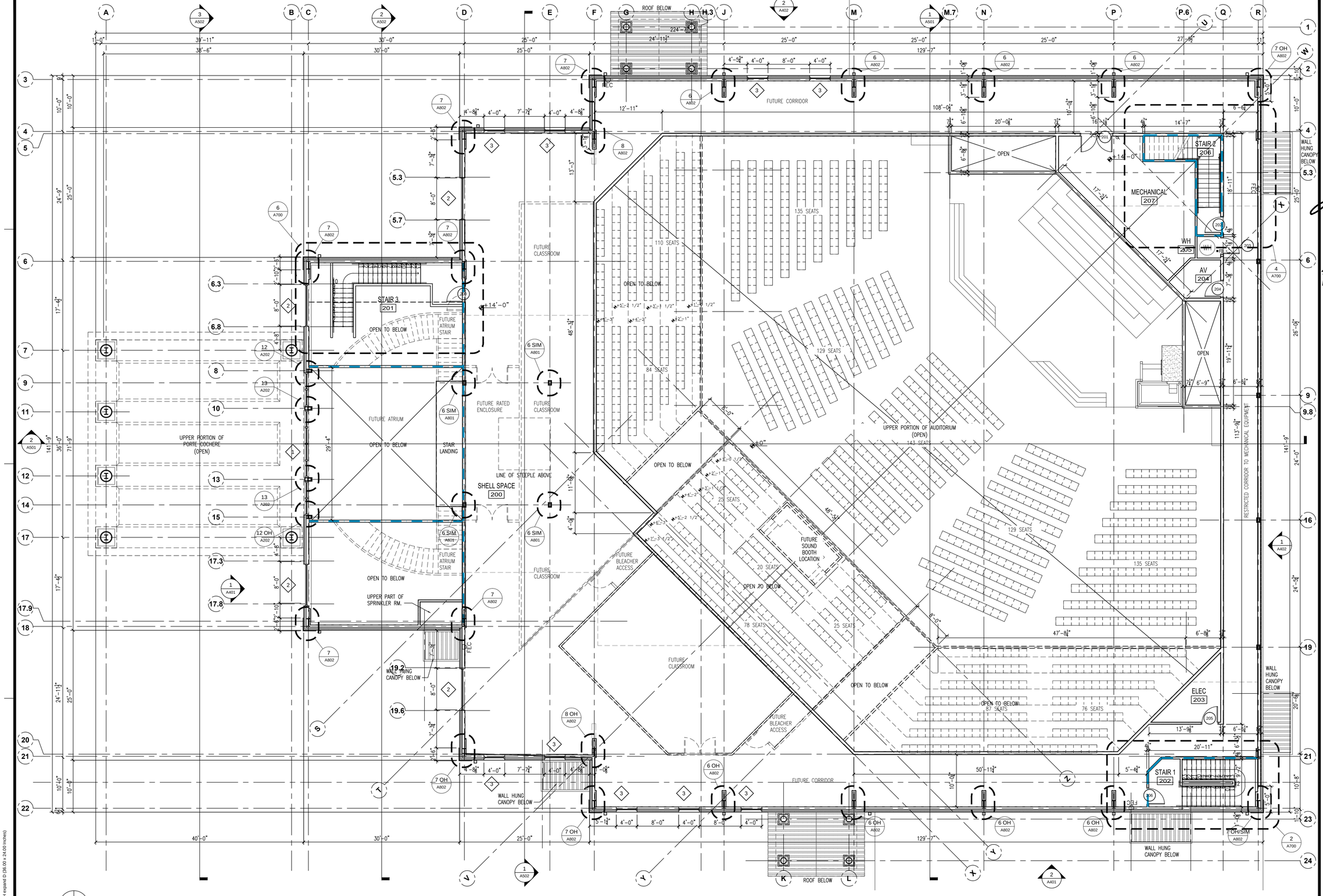

CALLED NORTH

1 SECOND FLOOR PLAN

SCALE: 1/8" = 1'-0"

OWNERSHIP OF DRAWINGS THIS DOCUMENT AND THE IDEAS AND DESIGNS INCORPORATED HEREIN, AS AN INSTRUMENT OF PROFESSIONAL SERVICES, IS THE PROPERTY OF ARCHITECTURAL ALLIANCE INCORPORATED AND IS NOT TO BE USED, IN WHOLE OR IN PART, FOR ANY OTHER PROJECT WITHOUT THE WRITTEN AUTHORIZATION OF ARCHITECTURAL ALLIANCE INCORPORATED. © COPYRIGHT 2021

SAVED: LEOT
PLOT: LEO TAN
PLOT DATE: 8/16/2021 2:38 PM
SHEET SIZE: ARCH expand D (36.00 x 24.00 Inches)

Architectural Alliance Incorporated
350 Pine Street, Suite 720
Ednco Plaza
Beaumont, Texas 77701
TEL (409) 866-7196
FAX (409) 866-1745
J. ROSS CLARK, A.I.A.
RONALD M. JONES, A.I.A.
www.archtxcad.com

REGISTERED ARCHITECT JAMES R. CLARK 8212 STATE OF TEXAS
8/16/2021

REGISTERED ARCHITECT RONALD M. JONES 13662 STATE OF TEXAS
8/16/2021

UNITED CHRISTIAN ACADEMY
First Pentecostal Church
10619 Highway 69
Port Arthur, TX 77642

ISSUED FOR
SCHEMATIC DESIGN X
DATE: 10/6/2020
DESIGN DEVELOPMENT X
DATE: 3/5/2021
BIDS & CONSTRUCTION X
DATE: 8/2/2021
REVISION:
DATE:
REVISION:
DATE:
REVISION:
DATE:

DRAWINGS SHEET TITLE
SECOND FLOOR PLAN

SHEET NUMBER
A102

20105
PROJECT NUMBER

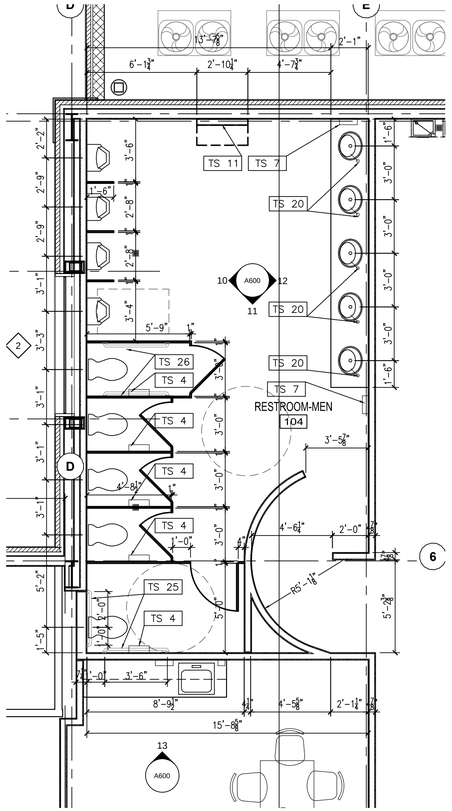

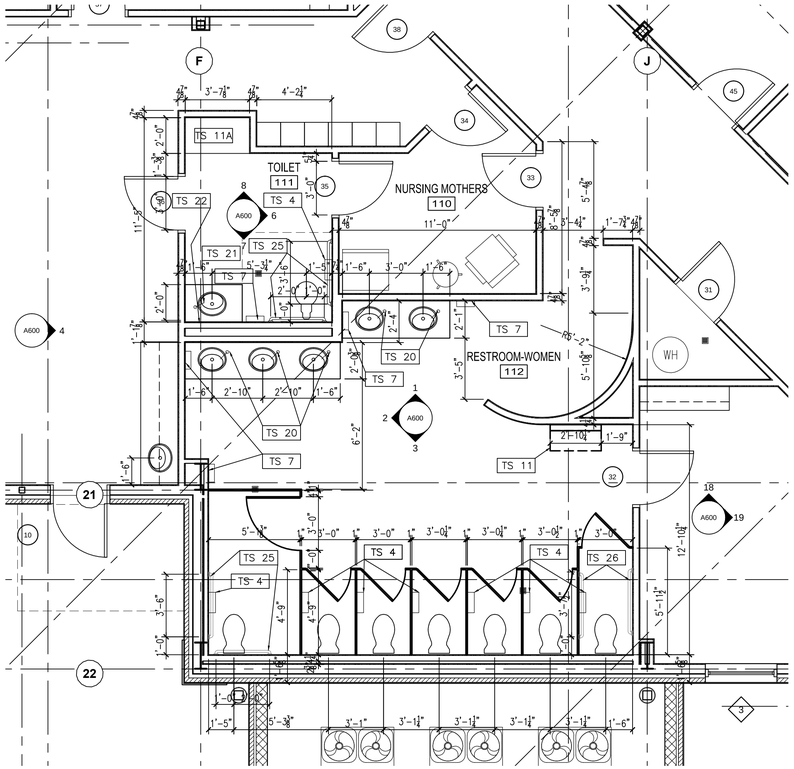

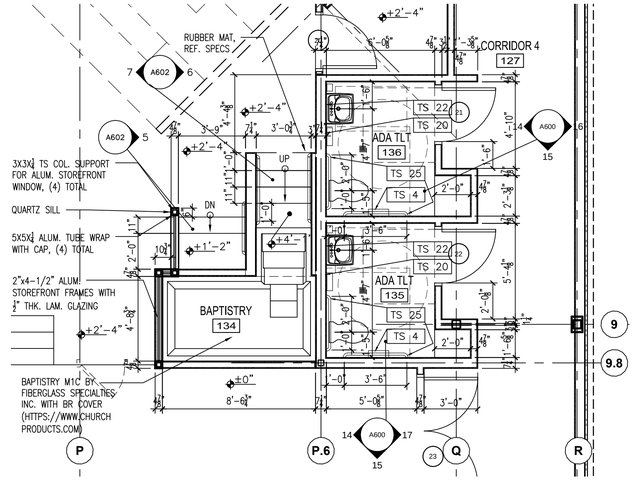

CALLED NORTH

3 ENLARGED PLAN - ADA TLTS. 135 & 136

SCALE: 1/4" = 1'-0"

CALLED NORTH

1 ENLARGED PLAN - RESTROOM MEN-104

SCALE: 1/4" = 1'-0"

CALLED NORTH

2 ENLARGED PLAN - RESTROOM WOMEN-112

SCALE: 1/4" = 1'-0"

TOILET ACCESSORY SCHEDULE

	BOBRICK TOILET ACCESSORIES	
TS3	BRADLEY 747-34.5 W X 46 H WITH CLIP FASTENERS	FRAMELESS MIRROR SHALL BE OF FIRST ¼" FLOATING GLASS, EDGES GROUND AND POLISHED SMOOTH
TS4	B-3588 TRIMLINE SURFACE MOUNTED DOUBLE ROLL TOILET PAPER DISPENSER	SATIN-FINISH STAINLESS STEEL UNIT WITH ALL WELDED CONSTRUCTION. TUMBLER LOCK. PROVIDED AND INSTALLED BY CONTRACTOR
TS7	B-359039 TRIMLINE SURFACE-MOUNTED TOWEL DISPENSER	SATIN-FINISH STAINLESS STEEL. 100 MM STAINLESS STEEL SURFACE MOUNTING. DISPENSES 300 C-FOLD OR 400 MULTIFOLD TOWEL.
TS8	B-254 SURFACE MOUNTED SANITARY NAPKIN DISPOSAL UNIT	SURFACE MOUNTED SANITARY NAPKIN DISPOSAL, SATIN FINISH STAINLESS STEEL. LOCK AND SELF CLOSING. PROVIDED AND INSTALLED BY CONTRACTOR.
TS10	B-6717 SINGLE ROBE HOOK	SATIN-FINISH STAINLESS STEEL. FLANGE IS 2" X 2". INSIDE TLT PARTITION DOOR. MOUNTED 48" AFF. PROVIDED AND INSTALLED BY CONTRACTOR TOTAL OF 4 IN GIRLS TOILET STALLS
TS11	KOALA CARE WALL MOUNTED DIAPER CHANGING STATION	WALL MOUNTED DIAPER CHANGING STATION
TS11A	KOALA CARE COUNTERTOP DIAPER CHANGING STATION	COUNTERTOP DIAPER CHANGING STATION
TS12	BOBRICK B-223X24 24" MOP AND BROOM HOLDER	SATIN-FINISH STAINLESS STEEL. FLANGE IS 2" X 2". PROVIDED AND INSTALLED BY CONTRACTOR
TS15	BRADLEY 747-60 W X 46 H WITH CLIP FASTENERS	FRAMELESS MIRROR SHALL BE OF FIRST ¼" FLOATING GLASS, EDGES GROUND AND POLISHED SMOOTH
TS20	B-82316 FOAM, MANUAL TOP-FILL SOAP SOAP DISPENSER	TOP-FILLING COUNTER-MOUNTED FOAMING SOAP DISPENSER EQUIPPED WITH INTEGRATED FUNNEL. BRIGT-POLISHED SPOUT, COVER AND ESCUTCHEON
TS21	B-2111 CLASSIC SERIES SURFACE-MOUNTED SOAP DISPENSER	VERTICAL TANK IS SATIN-FINISH STAINLESS. VALVE DISPENSER ALL-PURPOSE HAND SOAP. 4¾" W X 8⅛" H X 3½"
TS23	B-165 18" X 36" MIRROR SATIN AND WELDED STAINLESS STEEL FRAME BOBRICK	¼" X 18" X 36" TEMPERED GLASS MIRROR IN FINISH STAINLESS STEEL ONE PIECE CHANNEL FRAME MOUNTED WITH TAMPER PROOF HANGERS. PROVIDED AND INSTALLED BY CONTRACTOR
TS24	B-2621 CLASSIC SERIES SURFACE-MOUNTED PAPER TOWEL DISPENSER	SATIN-FINIS STAINLESS STEEL. DISPENSES 200 C-FOLD OR 275 MULTIFOLD TOWELS. DORR HAS KNOB-LATCH. HEMMED TOWEL TRAY OPENING. UNIT 10¾" W X 7⅞" H 4" D
TS25	(1) B-5806 X 36" (1) B-5806 X 42" STANDARD ADA TOILET GRAB BARS	STANDARD ACCESS TOILET STALL SATIN FINISH STAINLESS STEEL GRAB BARS 36" AND 42" IN 1 ½" DIAMETER WITH SNAP FLANGE. PROVIDED AND INSTALLED BY CONTRACTOR
TS26	(2) B-5806 X 42" STANDARD ADA TOILET GRAB BARS (AMBULATORY STALLS)	AMBULATORY ACCESS TOILET STALL SATIN FINISH STAINLESS STEEL GRAB BARS 42" IN 1 ½" DIAMETER WITH SNAP FLANGE. PROVIDED AND INSTALLED BY CONTRACTOR

Architectural Alliance Incorporated
339 Pine Street, Suite 720
Edison Plaza
Beaumont, Texas 77701
TEL (409) 866-7196
FAX (409) 866-1745
J. ROSS CLARK, A.I.A.
RONALD M. JONES, A.I.A.
www.archtectall.com

REGISTERED ARCHITECT JAMES R. CLARK 8212 STATE OF TEXAS
8/16/2021

REGISTERED ARCHITECT RONALD M. JONES 13662 STATE OF TEXAS
8/16/2021

UNITED CHRISTIAN ACADEMY

First Pentecostal Church

10619 Highway 69

Port Arthur, TX 77642

ISSUED FOR

SCHEMATIC DESIGN [X]
DATE: 10/6/2020

DESIGN DEVELOPMENT [X]
DATE: 3/5/2021

BIDS & CONSTRUCTION [X]
DATE: 8/2/2021

REVISION:
DATE:

REVISION:
DATE:

REVISION:
DATE:

DRAWINGS SHEET TITLE

ENLARGED PLANS

REF. ADD #2

SHEET NUMBER

~~A103~~

20105
PROJECT NUMBER

OWNERSHIP OF DRAWINGS THIS DOCUMENT AND THE IDEAS AND DESIGNS INCORPORATED HEREIN, AS AN INSTRUMENT OF PROFESSIONAL SERVICES, IS THE PROPERTY OF ARCHITECTURAL ALLIANCE INCORPORATED AND IS NOT TO BE USED, IN WHOLE OR IN PART, FOR ANY OTHER PROJECT WITHOUT THE WRITTEN AUTHORIZATION OF ARCHITECTURAL ALLIANCE INCORPORATED. © COPYRIGHT 2021

SAVED: LEOT
PLOT: LEO TAN
PLOT DATE: 8/16/2021 1:54 PM
SHEET SIZE: ARCH expand D (36.00 x 24.00 Inches)

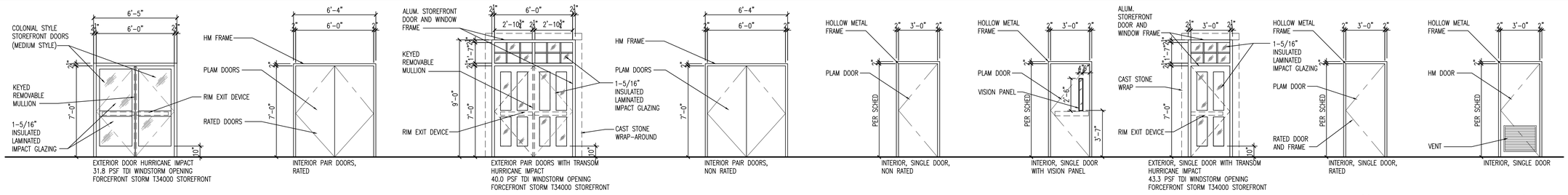

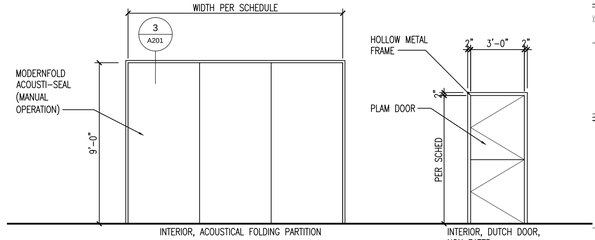

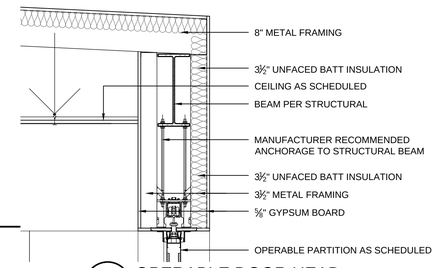

3 OPERABLE DOOR HEAD
SCALE: 3/4" = 1'-0"

FIRST FLOOR DOOR AND FRAME SCHEDULE

DOOR NUMBER	DOOR TYPE	DOOR SIZE WIDTH	DOOR SIZE HEIGHT	DOOR SIZE THICKNESS	DOOR MATERIAL	DOOR VISION PANEL	FRAME MATERIAL	FRAME WALL THICKNESS	HARDWARE: HD SS BB HINGE	CONTINUOUS HINGE	RIM EXIT DEV W/ LEVER	REMOVABLE MULLION	VERT ROD EXIT DEV	HEAD/FT BOLT (INACT. LEAF)	ASTRAGAL	CYLINDER LOCK	ENTRANCE LOCK	OFFICE LOCKSET	INTRUDER LOCK	PASSAGE SET	TLT INDICATOR PRIVACY	STORAGE SET	ELECTRIC STRIKE	PROX CARD READ	PUSH BUTTON LOCK	PULL PLATE	PUSH PLATE	ADA CLOSER	FLOOR STOP	WALL STOP	OVERHEAD STOP	SOUND STRIP	HEAD DRIP	WEATHERSTRIPPING	THRESHOLD	SWEEP	FLUSH BOLT	DOOR SENSOR	FIRE ALARM MAG HOLD-OPEN	FIRE RATING LABEL (MIN)	NOTES	DOOR NUMBER
1	A	6'-0"	7'-0"	1 3/4"	AL/GL	--	AL	7 1/8"		X			X													X		X						X	X				--	--	--	1
2	A	6'-0"	7'-0"	1 3/4"	AL/GL	--	AL	7 1/8"		X			X													X		X						X	X				--	--	--	2
3	A	6'-0"	7'-0"	1 3/4"	AL/GL	--	AL	7 1/8"		X			X													X		X						X	X				--	--	--	3
4	A	6'-0"	7'-0"	1 3/4"	AL/GL	--	AL	7 1/8"		X			X													X		X						X	X				--	--	--	4
5	C	6'-0"	7'-0"	1 3/4"	AL/GL	--	AL	1'-0 5/8"		X	X	X														X		X			X			X	X	X			--	--	--	5
6	C	6'-0"	7'-0"	1 3/4"	AL/GL	--	AL	8 5/8"		X	X	X														X		X			X			X	X	X			--	--	--	6
7	C	6'-0"	7'-0"	1 3/4"	AL/GL	--	AL	8 5/8"		X	X	X														X		X			X			X	X	X			--	--	--	7
8	G	3'-0"	7'-0"	1 3/4"	HM	--	MTL	1'-0 5/8"	X		X																X			X			X	X	X			--	--	--	8
9	C	6'-0"	7'-0"	1 3/4"	AL/GL	--	AL	1'-0 5/8"		X	X	X														X		X			X			X	X	X			--	--	--	9
10	G	3'-0"	7'-0"	1 3/4"	HM	--	MTL	1'-0 5/8"	X		X																X			X		X	X	X	X			--	--	--	10
11	G	3'-0"	7'-0"	1 3/4"	HM	--	MTL	1'-0 5/8"	X							X													X			X	X	X			--	--	--	11
12	H	3'-0"	7'-0"	1 3/4"	WD	--	MTL	4 7/8"			X					X							X					X		X								60	--	--	12
13	H	3'-0"	7'-0"	1 3/4"	WD	--	MTL	4 7/8"	X										X									X		X					X			60	--	--	13
14	B	6'-0"	7'-0"	1 3/4"	AL/GL	--	AL	4 7/8"		X			X		X													X			X							X	60	--	--	14
15	F	3'-0"	7'-0"	1 3/4"	WD	X	MTL	4 7/8"	X											X								X		X		X						--	--	--	15
16	F	3'-0"	7'-0"	1 3/4"	WD	X	MTL	4 7/8"	X											X								X		X		X						--	--	--	16
17	D	6'-0"	7'-0"	1 3/4"	WD	--	MTL	4 7/8"		X			X		X												X	X			X								--	--	--	17
18	D	6'-0"	7'-0"	1 3/4"	WD	--	MTL	4 7/8"		X			X		X												X	X			X								--	--	--	18
19	E	3'-0"	7'-0"	1 3/4"	WD	--	MTL	4 7/8"	X										X									X		X								--	--	--	19
20	E	3'-0"	7'-0"	2"	WD	--	MTL	5"	X												X							X			X								--	--	--	20
21	E	3'-0"	7'-0"	1 3/4"	WD	--	MTL	4 7/8"	X													X						X			X								--	--	--	21
22	E	3'-0"	7'-0"	1 3/4"	WD	--	MTL	4 7/8"	X													X						X			X								--	--	--	22
23	D	6'-0"	7'-0"	1 3/4"	WD	--	MTL	4 7/8"		X			X		X												X	X			X								--	--	--	23
24	D	6'-0"	7'-0"	1 3/4"	WD	--	MTL	4 7/8"		X			X		X												X	X			X								--	--	--	24
25	E	3'-0"	7'-0"	1 3/4"	WD	--	MTL	4 7/8"	X										X									X		X								--	--	--	25
26	H	3'-0"	7'-0"	1 3/4"	WD	--	MTL	4 7/8"	X													X						X											60	--	--	26
27	E	3'-0"	7'-0"	1 3/4"	WD	--	MTL	4 7/8"	X										X									X		X								--	--	--	27
28	E	3'-0"	7'-0"	1 3/4"	WD	--	MTL	4 7/8"	X															X				X										--	--	--	28
29	E	3'-0"	7'-0"	1 3/4"	WD	--	MTL	4 7/8"	X															X				X										--	--	--	29
30	E	3'-0"	7'-0"	1 3/4"	WD	--	MTL	4 7/8"	X																			X		X								--	--	--	30
31	E	3'-0"	7'-0"	1 3/4"	WD	--	MTL	4 7/8"	X															X				X										--	--	--	31
32	E	3'-0"	7'-0"	1 3/4"	WD	--	MTL	4 7/8"	X																			X			X							--	--	--	32
33	E	3'-0"	7'-0"	1 3/4"	WD	--	MTL	4 7/8"	X														X					X			X							--	--	--	33
34	E	3'-0"	7'-0"	1 3/4"	WD	--	MTL	4 7/8"	X														X					X		X								--	--	--	34
35	E	3'-0"	7'-0"	1 3/4"	WD	--	MTL	4 7/8"	X														X					X		X								--	--	--	35
36	E	3'-0"	7'-0"	1 3/4"	WD	--	MTL	4 7/8"	X														X					X			X							--	--	--	36
37	E	3'-0"	7'-0"	1 3/4"	WD	--	MTL	4 7/8"	X													X						X			X							--	--	--	37
38	L	3'-0"	7'-0"	1 3/4"	WD	--	MTL	4 7/8"	X												X							X			X						X	--	--	DUTCH DOOR	38
39	H	3'-0"	7'-0"	1 3/4"	WD	--	MTL	4 7/8"	X										X									X		X								60	--	--	39
41	E	3'-0"	7'-0"	1 3/4"	WD	--	MTL	4 7/8"	X										X					X				X		X								60	--	--	41
42	B	6'-0"	7'-0"	1 3/4"	AL/GL	--	AL	4 7/8"		X			X		X												X			X							X	60	--	--	42
43	D	6'-0"	7'-0"	1 3/4"	WD	--	MTL	4 7/8"		X			X		X												X			X		X						60	--	--	43
44	F	3'-0"	7'-0"	1 3/4"	WD	--	MTL	4 7/8"	X											X								X		X		X						--	--	--	44
45	F	3'-0"	7'-0"	1 3/4"	WD	--	MTL	4 7/8"	X											X								X		X		X						--	--	--	45
46	F	3'-0"	7'-0"	1 3/4"	WD	--	MTL	4 7/8"	X											X								X		X		X						--	--	--	46
47	D	6'-0"	7'-0"	1 3/4"	WD	--	MTL	4 7/8"		X			X		X												X			X		X						--	--	--	47
48	E	3'-6"	7'-0"	1 3/4"	WD	--	MTL	4 7/8"	X										X		X							X			X							--	--	--	48
49	E	3'-6"	7'-0"	2"	WD	--	MTL	5"	X												X							X			X							--	--	--	49
50	E	3'-0"	7'-0"	1 3/4"	WD	--	MTL	7 1/4"											X									X		X								--	--	--	50
51	E	2'-0"	7'-0"	1 3/4"	WD	--	MTL	4 7/8"	X										X									X			X							--	--	--	51
52	E	3'-0"	7'-0"	1 3/4"	WD	--	MTL	4 7/8"	X											X								X		X		X						--	--	--	52
53	E	3'-0"	7'-0"	1 3/4"	WD	--	MTL	4 7/8"	X											X								X		X								60	--	--	53
54	E	3'-0"	7'-0"	1 3/4"	WD	--	MTL	4 7/8"	X		X																	X			X							60	--	--	54
55	K	46'-6"	7'-0"	--	NA	--	--	--	1'-4"																														--	--	HARDWARE BY DR. MANUF.	55
56	K	14'-8"	9'-0"	--	NA	--	--	--	1'-4"																														--	--	HARDWARE BY DR. MANUF.	56
57	K	14'-8"	9'-0"	--	NA	--	--	--	1'-4"																														--	--	HARDWARE BY DR. MANUF.	57
58	K	14'-4"	9'-0"	--	NA	--	--	--	1'-4"																														--	--	HARDWARE BY DR. MANUF.	58
59	K	16'-6"	9'-0"	--	NA	--	--	--	1'-4"																														--	--	HARDWARE BY DR. MANUF.	59
60	K	25'-8"	9'-0"	--	NA	--	--	--	1'-4"																														--	--	HARDWARE BY DR. MANUF.	60
61	D	6'-0"	7'-0"	1 3/4"	WD	--	MTL	4 7/8"	X						X								X						X								--	--	--	61

SECOND FLOOR DOOR AND FRAME SCHEDULE

DOOR NUMBER	DOOR TYPE	DOOR SIZE WIDTH	DOOR SIZE HEIGHT	DOOR SIZE THICKNESS	DOOR MATERIAL	DOOR VISION PANEL	FRAME MATERIAL	FRAME WALL THICKNESS	HARDWARE: HD SS BB HINGE	CONTINUOUS HINGE	RIM EXIT DEV W/ LEVER	REMOVABLE MULLION	VERT ROD EXIT DEV	HEAD/FT BOLT (INACT. LEAF)	ASTRAGAL	CYLINDER LOCK	ENTRANCE LOCK	OFFICE LOCKSET	INTRUDER LOCK	PASSAGE SET	TLT INDICATOR PRIVACY	STORAGE SET	ELECTRIC STRIKE	PROX CARD READ	PUSH BUTTON LOCK	PULL PLATE	PUSH PLATE	ADA CLOSER	FLOOR STOP	WALL STOP	OVERHEAD STOP	SOUND STRIP	HEAD DRIP	WEATHERSTRIPPING	THRESHOLD	SWEEP	FLUSH BOLT	DOOR SENSOR	FIRE ALARM MAG HOLD-OPEN	FIRE RATING LABEL (MIN)	NOTES	DOOR NUMBER
200	E	3'-0"	7'-0"	1 3/4"	WD	--	MTL	7 1/4"	X		X										X							X		X		X							60	--	--	200
201	D	6'-0"	7'-0"	1 3/4"	WD	--	MTL	7 1/4"	X					X								X							X		X								--	--	--	201
202	E	3'-0"	7'-0"	1 3/4"	WD	--	MTL	7 1/4"	X												X							X		X								60	--	--	202
203	J	3'-0"	7'-0"	1 3/4"	HM	--	MTL	7 1/4"														X								X									--	--	--	203
204	E	3'-0"	7'-0"	1 3/4"	WD	--	MTL	7 1/4"														X								X									--	--	--	204
205	E	3'-0"	7'-0"	1 3/4"	WD	--	MTL	4 7/8"		X																				X									--	--	--	205
206	H	3'-0"	7'-0"	1 3/4"	WD	--	MTL	4 7/8"		X																				X									--	--	--	206

1 DOOR AND FRAME SCHEDULE
SCALE: NTS

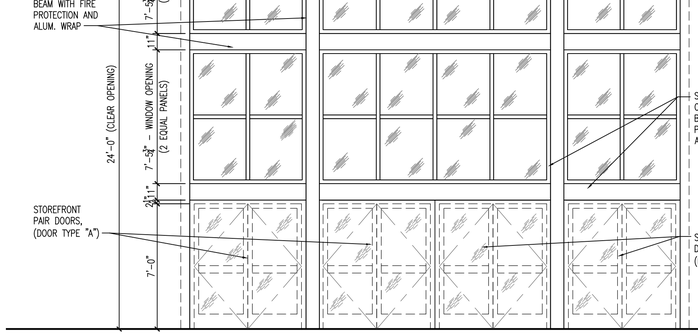

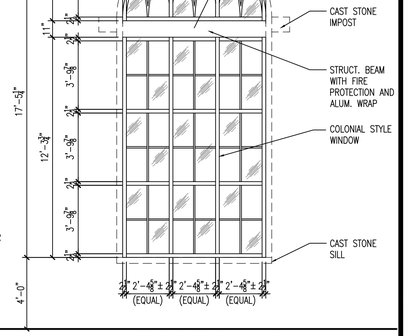

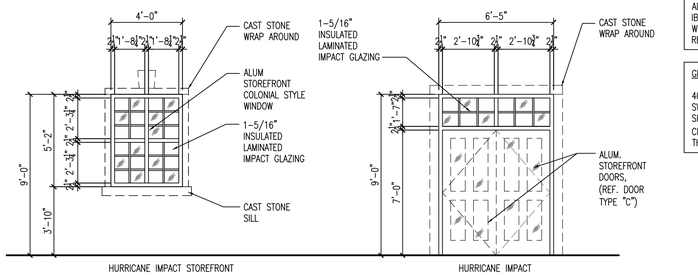

2 DOOR AND WINDOW TYPES
SCALE: 1/4" = 1'-0"

NOTE:

ALL EXTERIOR DOORS AND WINDOWS TO COMPLY WITH IBC 2015 WINDSTORM REQUIREMENTS FOR ULTIMATE WIND SPEED OF 149 MPH – RISK CATEGORY 3. REFERENCE STRUCT. DRAWINGS FOR WIND PRESSURE

GENERAL NOTE PER TAS 2012:

404.2.10 DOOR AND GATE SURFACES. SWINGING DOOR AND GATE SURFACES WITHIN 10 INCHES OF THE FINISH FLOOR OR GROUND MEASURED VERTICALLY SHALL HAVE A SMOOTH SURFACE ON THE PUSH SIDE EXTENDING THE FULL WIDTH OF THE DOOR OR GATE. PARTS CREATING HORIZONTAL OR VERTICAL JOINTS IN THESE SURFACES SHALL BE WITHIN 1/16" OF THE SAME PLANE AS OF THE OTHER. CAVITIES CREATED BY ADDED KICK PLATES SHALL BE CAPPED.

Architectural Alliance Incorporated
350 Pine Street, Suite 720
Ellison Plaza
Beaumont, Texas 77701
TEL (409) 866-7166
FAX (409) 866-1745
J. ROSS CLARK, A.I.A.
RONALD M. JONES, A.I.A.
www.archtexdal.com

REGISTERED ARCHITECT JAMES R. CLARK 8212 STATE OF TEXAS
8/16/2021
REGISTERED ARCHITECT RONALD M. JONES 13662 STATE OF TEXAS
8/16/2021

UNITED CHRISTIAN ACADEMY
First Pentecostal Church
Port Arthur, TX 77642
10619 Highway 69

ISSUED FOR
SCHEMATIC DESIGN X DATE: 10/6/2020
DESIGN DEVELOPMENT X DATE: 3/5/2021
BIDS & CONSTRUCTION X DATE: 8/2/2021
REVISION: DATE:
REVISION: DATE:
REVISION: DATE:

DRAWINGS SHEET TITLE
DOOR AND WINDOW SCHEDULE, DOOR TYPES

SHEET NUMBER
A201

20105
PROJECT NUMBER

SAVED: LEOT
PLOT: LEO TAN
PLOT DATE: 8/16/2021 1:55 PM
SHEET SIZE: ARCH expand D (36.00 x 24.00 inches)

OWNERSHIP OF DRAWINGS THIS DOCUMENT AND THE IDEAS AND DESIGNS INCORPORATED HEREIN, AS AN INSTRUMENT OF PROFESSIONAL SERVICES, IS THE PROPERTY OF ARCHITECTURAL ALLIANCE INCORPORATED AND IS NOT TO BE USED, IN WHOLE OR IN PART, FOR ANY OTHER PROJECT WITHOUT THE WRITTEN AUTHORIZATION OF ARCHITECTURAL ALLIANCE INCORPORATED. © COPYRIGHT 2021

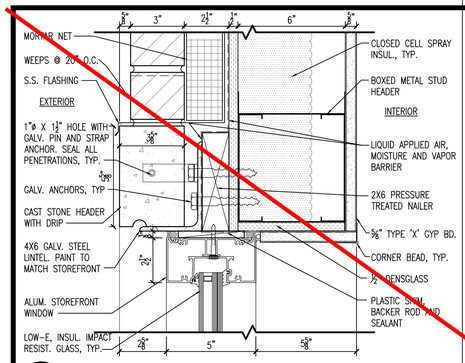

1 STOREFRONT HEAD - SECTION
SCALE: 3" = 1'-0"

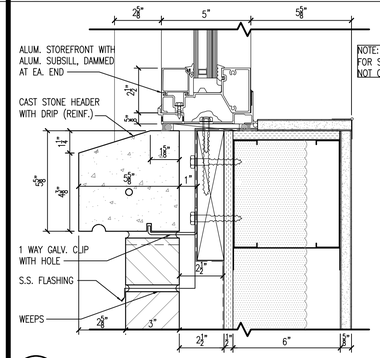

2 STOREFRONT SILL - SECTION
SCALE: 3" = 1'-0"

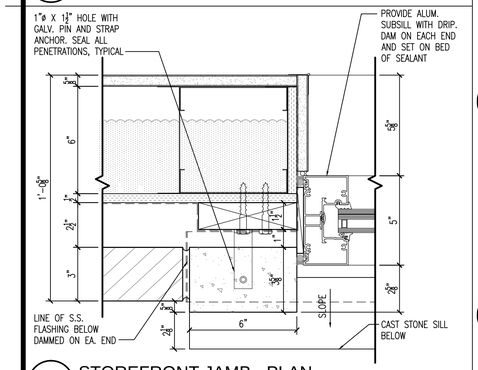

3 STOREFRONT JAMB - PLAN
SCALE: 3" = 1'-0"

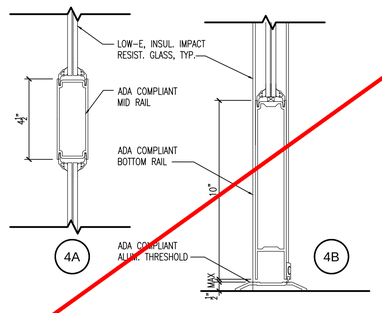

4 STOREFRONT DOOR - SECTION

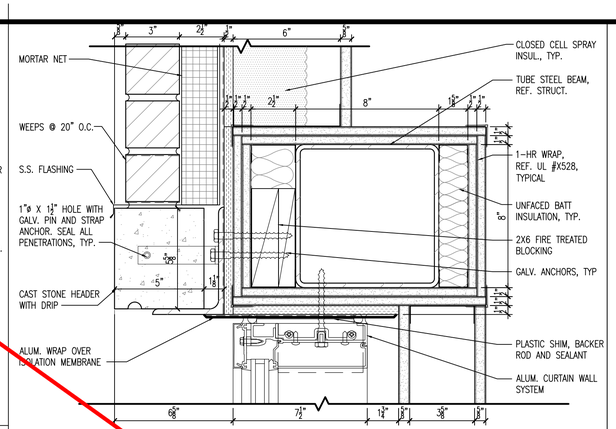

5 CURTAIN WALL HEAD - SECTION
SCALE: 3" = 1'-0"

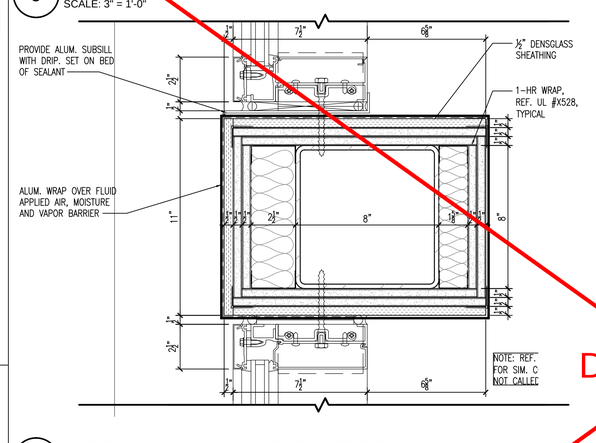

6 CURTAIN WALL SILL & HEAD - SECTION
SCALE: 3" = 1'-0"

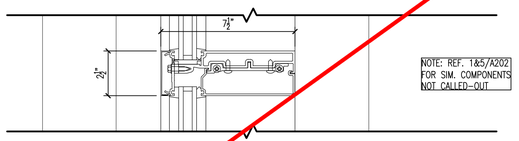

7 CURTAIN WALL INTERMEDIATE MULLION - SECTION
SCALE: 3" = 1'-0"

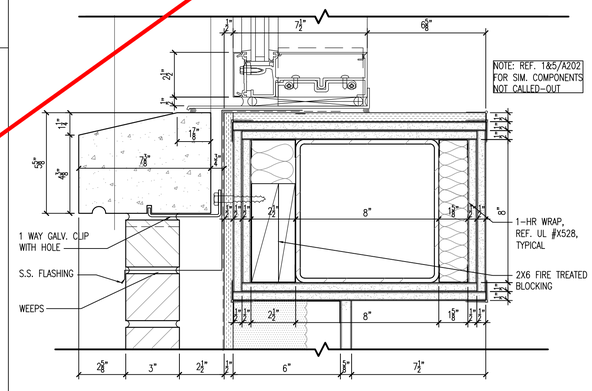

8 CURTAIN WALL SILL - SECTION
SCALE: 3" = 1'-0"

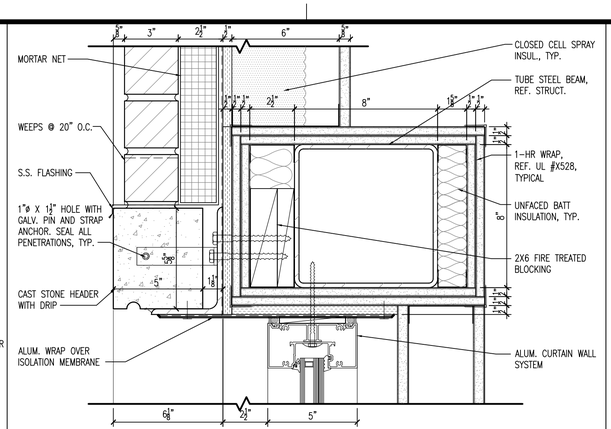

9 STOREFRONT HEAD - SECTION
SCALE: 3" = 1'-0"

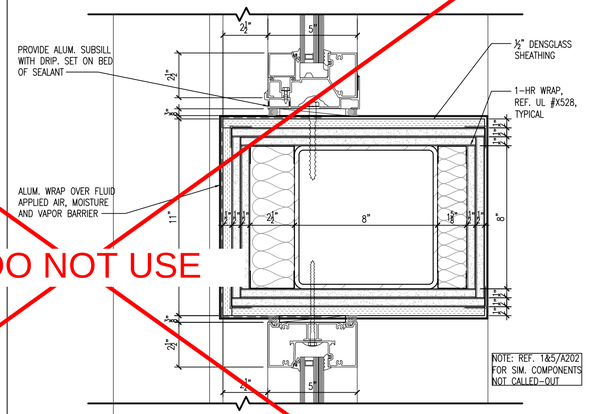

10 STOREFRONT HEAD - SECTION
SCALE: 3" = 1'-0"

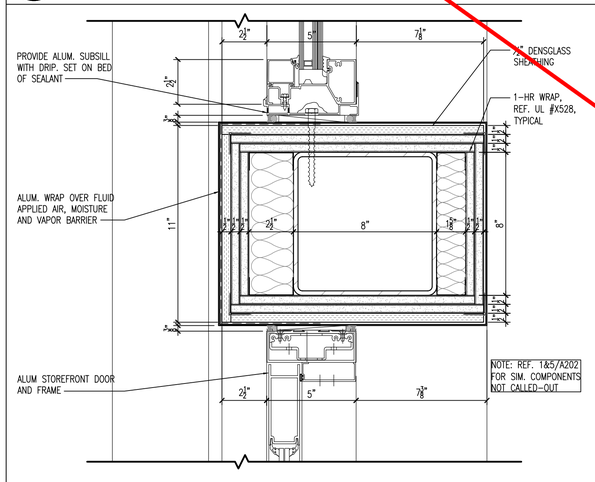

11 STOREFRONT SILL/DOOR HEAD - SECTION
SCALE: 1 1/2" = 1'-0"

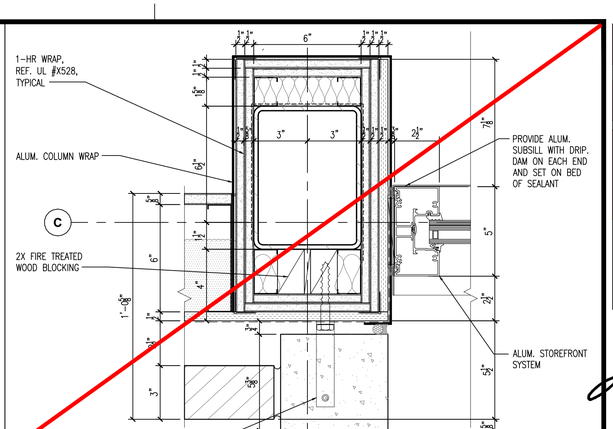

12 STOREFRONT JAMB - PLAN
SCALE: 1 1/2" = 1'-0"

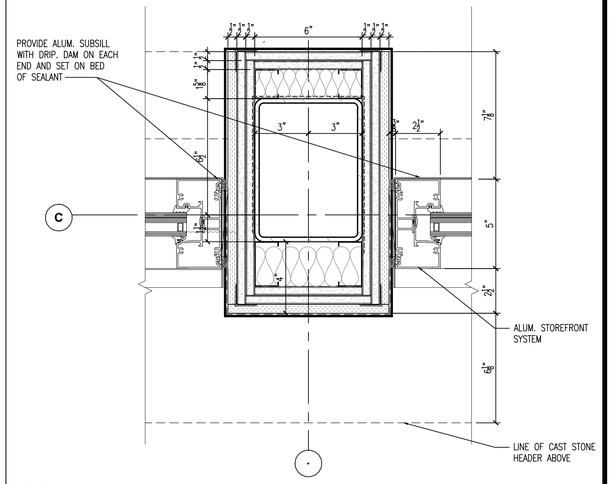

13 STOREFRONT JAMB - PLAN
SCALE: 1 1/2" = 1'-0"

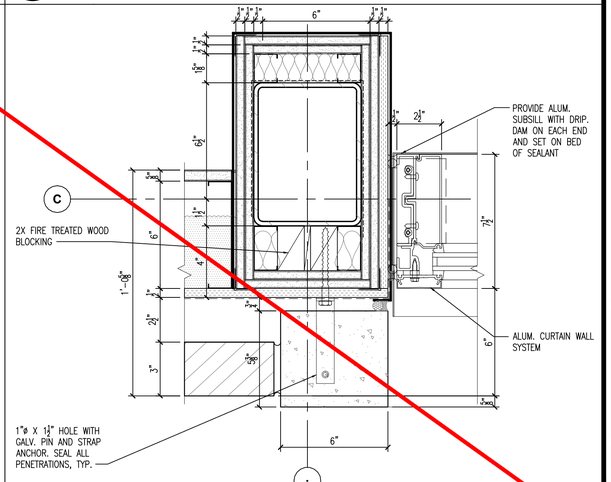

14 CURTAIN WALL JAMB - PLAN
SCALE: 1 1/2" = 1'-0"

DO NOT USE

Architectural Alliance Incorporated
339 Pine Street, Suite 720
Edison Plaza
Beaumont, Texas 77701
TEL (409) 866-7196
FAX (409) 866-1745
J. ROSS CLARK, A.I.A.
RONALD M. JONES, A.I.A.
www.archtxcall.com

REGISTERED ARCHITECT JAMES R. CLARK 8212 STATE OF TEXAS
8/16/2021

REGISTERED ARCHITECT RONALD M. JONES 13662 STATE OF TEXAS
8/16/2021

UNITED CHRISTIAN ACADEMY
First Pentecostal Church
Port Arthur, TX 77642
10619 Highway 69

ISSUED FOR
SCHEMATIC DESIGN X
DATE: 10/6/2020
DESIGN DEVELOPMENT X
DATE: 3/5/2021
BIDS & CONSTRUCTION X
DATE: 8/2/2021
REVISION:
DATE:
REVISION:
DATE:
REVISION:
DATE:

DRAWINGS SHEET TITLE
DOOR AND WINDOW DETAILS
REF. ADD #2

SHEET NUMBER
A202

20105
PROJECT NUMBER

SAVED: LEOT
PLOT: LEO TAN
PLOT DATE: 8/16/2021 1:55 PM
SHEET SIZE: ARCH expand D (36.00 x 24.00 Inches)

OWNERSHIP OF DRAWINGS THIS DOCUMENT AND THE IDEAS AND DESIGNS INCORPORATED HEREIN, AS AN INSTRUMENT OF PROFESSIONAL SERVICES, IS THE PROPERTY OF ARCHITECTURAL ALLIANCE INCORPORATED AND IS NOT TO BE USED, IN WHOLE OR IN PART, FOR ANY OTHER PROJECT WITHOUT THE WRITTEN AUTHORIZATION OF ARCHITECTURAL ALLIANCE INCORPORATED. © COPYRIGHT 2021

REFLECTED CEILING LEGEND

- 2'–0"x2'–0" ACOUST. CEILING TILES ON TEE GRID SUSP. SYSTEM. NOTE: AT TOILETS/RESTROOMS, JANITOR ROOM, UTIL. AREAS, PROV. VINYL FACED MOISTURE RESISTANT SHEETROCK PANELS ON ALUM. GRID
- 1 LAYER OF ⅝" TYPE "X" GYPSUM BOARD. REF. SPECS.
- 2X4 LED LIGHT FIXTURE. REF. MEP DRAWINGS
- 2X2 LED LIGHT FIXTURE. REF. MEP DRAWINGS
- 1X4 LED LIGHT FIXTURE. REF. MEP DRAWINGS
- WALL MOUNTED EXIT LIGHT (DIRECTIONS, AS SHOWN)
- CEILING MOUNTED EXIT LIGHT (DIRECTIONS, AS SHOWN)
- LED CAN LIGHT, REF. MEP DWGS,
- LED WALL MTD. LIGHT FIXTURE REF. MEP DRAWINGS
- LED SURFACE MOUNTED STRIP LIGHT FIXTURE, REF. MEP DRAWINGS
- SUSP. STRIP LIGHT FIXTURE, REF. MEP DRAWINGS
- CEILING REGISTERS, REF. MEP DRAWINGS
- E.S. EXPOSED STRUCTURE

REFLECTED CEILING NOTES

1. 2'–0" x 2'–0" ACOUSTICAL CEILING TILES ON SUSPENDED TEE GRID SYSTEM. ALL CEILING HEIGHT IS 9'–0" A.F.F. TYPICAL UNLESS NOTED OTHERWISE.
2. 1–HR RATED FLOOR–CEILING ASSEMBLY – 2'–0" x 2'–0" ACOUSTICAL CEILING TILES ON SUSPENDED TEE GRID SYSTEM. (UL #G256), TYPICAL AT FIRST FLOOR, U.N.O.
3. 1 LAYER OF ⅝" TYPE 'X' GYPSUM BOARD ON SUSPENDED GRID SYSTEM.
4. UNDERSIDE OF LINER PANEL (BLACK) AND GALV. STEEL BANDS (PAINT BLACK)
5. UNDERSIDE OF 148 MPH WINDSTORM RATED CANOPY.
6. INSTALL UNFACED BATT INSULATION ON CAVITIES OF SLOPING GYPSUM BOARD ROOF FRAMING ABOVE CLASSROOMS AND AND SHELL SPACE 124.
7. HARDIE TEXTURED PANEL SMOOTH SAND FINISH (TYPICAL) OVER MOISTURE, AIR AND VAPOR BARRIER OVER ½" DENSGLASS SHEATHING.
8. 1 LAYER OF ⅝" MOISTURE RESISTANT GYPSUM BOARD.
9. HATCHED AREA DENOTES 1–HOUR ROOF PROTECTION. ROOF CONSTRUCTION 25'–0" FROM ANY FLOOR BELOW IS TO BE PROTECTED (UL #P516). REF. BUILDING SECTIONS.
10. UNDERSIDE OF 1–HR RATED ROOF–CEILING PROTECTION (UL #P516)
11. UNDERSIDE OF 1–HR RATED PRIMARY STRUCTURAL FRAMING PROTECTION (UL #X528). PAINT BLACK WHERE EXPOSED AT AUDITORIUM.
12. POLYURETHANE COMPONENT MOULDINGS ON PEDIMENT AND ENTABLATURE – FYPON OR APPROVED EQUAL.
13. EXPOSED GYPSUM BOARD CEILING BOTTOM SIDE OF STRUCTURE. HANG LIGHT FIXTURES ON TEMPORARY WIRES THIS AREA.
14. HARDIE PANELS V–GROOVE EDGE LOCATIONS

CALLED NORTH

1 FIRST FLOOR RCP
SCALE: 1/8" = 1'-0"

OWNERSHIP OF DRAWINGS THIS DOCUMENT AND THE IDEAS AND DESIGNS INCORPORATED HEREIN, AS AN INSTRUMENT OF PROFESSIONAL SERVICES, IS THE PROPERTY OF ARCHITECTURAL ALLIANCE INCORPORATED AND IS NOT TO BE USED, IN WHOLE OR IN PART, FOR ANY OTHER PROJECT WITHOUT THE WRITTEN AUTHORIZATION OF ARCHITECTURAL ALLIANCE INCORPORATED. © COPYRIGHT 2021

SAVED: MICHAELM
PLOT: LEO TAN
PLOT DATE: 8/16/2021 1:56 PM
SHEET SIZE: ARCH expand D (36.00 x 24.00 Inches)

Architectural Alliance Incorporated
350 Pine Street, Suite 720
Ellison Plaza
Beaumont, Texas 77701
TEL (409) 866-7196
FAX (409) 866-1745
J. ROSS CLARK, A.I.A.
RONALD M. JONES, A.I.A.
www.archtxcall.com

REGISTERED ARCHITECT J. ROSS CLARK 8212 STATE OF TEXAS
8/16/2021

REGISTERED ARCHITECT RONALD M. JONES 13662 STATE OF TEXAS
8/16/2021

Port Arthur, TX 77642

UNITED CHRISTIAN ACADEMY
First Pentecostal Church
10619 Highway 69

ISSUED FOR
SCHEMATIC DESIGN [X] DATE: 10/6/2020
DESIGN DEVELOPMENT [X] DATE: 3/5/2021
BIDS & CONSTRUCTION [X] DATE: 8/2/2021
REVISION: DATE:
REVISION: DATE:
REVISION: DATE:

DRAWINGS SHEET TITLE
FIRST FLOOR RCP

SHEET NUMBER
A301

20105
PROJECT NUMBER

REFLECTED CEILING LEGEND

- 2'-0"x2'-0" ACOUST. CEILING TILES ON TEE GRID SUSP. SYSTEM. NOTE: AT TOILETS/RESTROOMS, JANITOR ROOM, UTIL. AREAS, PROV. VINYL FACED MOISTURE RESISTANT SHEETROCK PANELS ON ALUM. GRID
- 1 LAYER OF 5/8" TYPE "X" GYPSUM BOARD. REF. SPECS.
- 2X4 LED LIGHT FIXTURE. REF. MEP DRAWINGS
- 2X2 LED LIGHT FIXTURE. REF. MEP DRAWINGS
- 1X4 LED LIGHT FIXTURE. REF. MEP DRAWINGS
- WALL MOUNTED EXIT LIGHT (DIRECTIONS, AS SHOWN)
- CEILING MOUNTED EXIT LIGHT (DIRECTIONS, AS SHOWN)
- LED CAN LIGHT, REF. MEP DWGS,
- LED WALL MTD. LIGHT FIXTURE REF. MEP DRAWINGS
- LED SURFACE MOUNTED STRIP LIGHT FIXTURE, REF. MEP DRAWINGS
- SUSP. STRIP LIGHT FIXTURE, REF. MEP DRAWINGS
- CEILING REGISTERS, REF. MEP DRAWINGS
- E.S. EXPOSED STRUCTURE

REFLECTED CEILING NOTES

1. 2'-0" x 2'-0" ACOUSTICAL CEILING TILES ON SUSPENDED TEE GRID SYSTEM. ALL CEILING HEIGHT IS 9'-0" A.F.F. TYPICAL UNLESS NOTED OTHERWISE.
2. 1-HR RATED FLOOR-CEILING ASSEMBLY - 2'-0" x 2'-0" ACOUSTICAL CEILING TILES ON SUSPENDED TEE GRID SYSTEM. (UL #G256), TYPICAL AT FIRST FLOOR, U.N.O.
3. 1 LAYER OF 5/8" TYPE 'X' GYPSUM BOARD ON SUSPENDED GRID SYSTEM.
4. UNDERSIDE OF LINER PANEL (BLACK) AND GALV. STEEL BANDS (PAINT BLACK)
5. UNDERSIDE OF 148 MPH WINDSTORM RATED CANOPY.
6. INSTALL UNFACED BATT INSULATION ON CAVITIES OF SLOPING GYPSUM BOARD ROOF FRAMING ABOVE CLASSROOMS AND AND SHELL SPACE 124.
7. HARDIE TEXTURED PANEL SMOOTH SAND FINISH (TYPICAL) OVER MOISTURE, AIR AND VAPOR BARRIER OVER ½" DENSGLASS SHEATHING.
8. 1 LAYER OF 5/8" MOISTURE RESISTANT GYPSUM BOARD.
9. HATCHED AREA DENOTES 1-HOUR ROOF PROTECTION. ROOF CONSTRUCTION 25'-0" FROM ANY FLOOR BELOW IS TO BE PROTECTED (UL #P516). REF. BUILDING SECTIONS.
10. UNDERSIDE OF 1-HR RATED ROOF-CEILING PROTECTION (UL #P516)
11. UNDERSIDE OF 1-HR RATED PRIMARY STRUCTURAL FRAMING PROTECTION (UL #X528). PAINT BLACK WHERE EXPOSED AT AUDITORIUM.
12. POLYURETHANE COMPONENT MOULDINGS ON PEDIMENT AND ENTABLATURE - FYPON OR APPROVED EQUAL.
13. EXPOSED GYPSUM BOARD CEILING BOTTOM SIDE OF STRUCTURE. HANG LIGHT FIXTURES ON TEMPORARY WIRES THIS AREA.
14. HARDIE PANELS V-GROOVE EDGE LOCATIONS

CALLED NORTH

1 SECOND FLOOR RCP
SCALE: 1/8" = 1'-0"

OWNERSHIP OF DRAWINGS THIS DOCUMENT AND THE IDEAS AND DESIGNS INCORPORATED HEREIN, AS AN INSTRUMENT OF PROFESSIONAL SERVICES, IS THE PROPERTY OF ARCHITECTURAL ALLIANCE INCORPORATED AND IS NOT TO BE USED, IN WHOLE OR IN PART, FOR ANY OTHER PROJECT WITHOUT THE WRITTEN AUTHORIZATION OF ARCHITECTURAL ALLIANCE INCORPORATED. © COPYRIGHT 2021

SAVED: MICHAELM
PLOT: LEO TAN
PLOT DATE: 8/16/2021 1:56 PM
SHEET SIZE: ARCH expand D (36.00 x 24.00 Inches)

Architectural Alliance Incorporated
350 Pine Street, Suite 720
Ednco Plaza
Beaumont, Texas 77701
TEL (409) 866-7196
FAX (409) 866-1745
J. ROSS CLARK, A.I.A.
RONALD M. JONES, A.I.A.
www.archtxcall.com

REGISTERED ARCHITECT JAMES R. CLARK 8212 STATE OF TEXAS
8/16/2021

REGISTERED ARCHITECT RONALD M. JONES 13662 STATE OF TEXAS
8/16/2021

UNITED CHRISTIAN ACADEMY
First Pentecostal Church
10619 Highway 69
Port Arthur, TX 77642

ISSUED FOR
SCHEMATIC DESIGN X DATE: 10/6/2020
DESIGN DEVELOPMENT X DATE: 3/5/2021
BIDS & CONSTRUCTION X DATE: 8/2/2021
REVISION: DATE:
REVISION: DATE:
REVISION: DATE:

DRAWINGS SHEET TITLE
SECOND FLOOR RCP

SHEET NUMBER
A302

20105
PROJECT NUMBER



1 FRONT ELEVATION
NOT TO SCALE



2 RIGHT SIDE ELEVATION
NOT TO SCALE





5 PERSPECTIVES
NOT TO SCALE

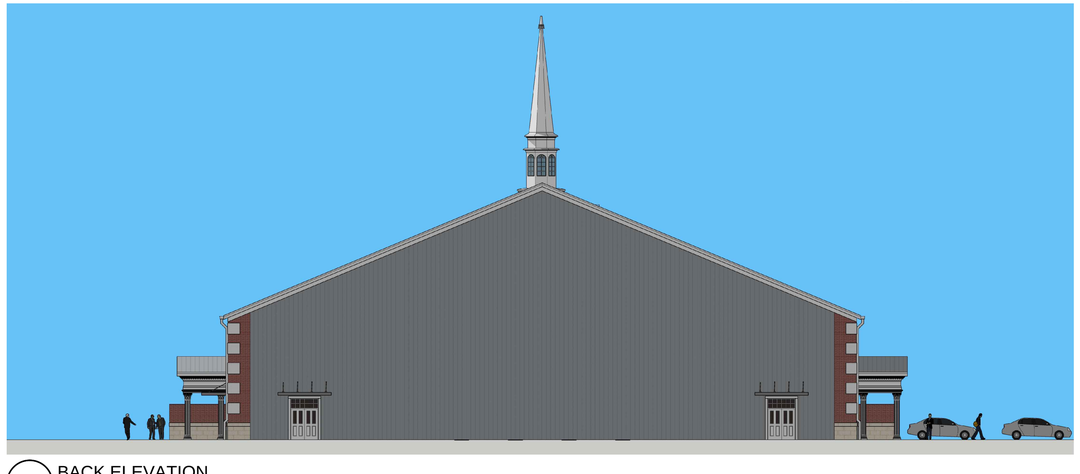

3 BACK ELEVATION
NOT TO SCALE



4 LEFT SIDE ELEVATION
NOT TO SCALE

OWNERSHIP OF DRAWINGS THIS DOCUMENT AND THE IDEAS AND DESIGNS INCORPORATED HEREIN, AS AN INSTRUMENT OF PROFESSIONAL SERVICES, IS THE PROPERTY OF ARCHITECTURAL ALLIANCE INCORPORATED AND IS NOT TO BE USED, IN WHOLE OR IN PART, FOR ANY OTHER PROJECT WITHOUT THE WRITTEN AUTHORIZATION OF ARCHITECTURAL ALLIANCE INCORPORATED. © COPYRIGHT 2021

Architectural Alliance Incorporated
350 Pine Street, Suite 720
Ednion Plaza
Beaumont, Texas 77701
TEL (409) 866-7166
FAX (409) 866-1745
J. ROSS CLARK, A.I.A.
RONALD M. JONES, A.I.A.
www.archtectall.com

REGISTERED ARCHITECT
JAMES R. CLARK
8212
STATE OF TEXAS
8/16/2021

REGISTERED ARCHITECT
RONALD M. JONES
13662
STATE OF TEXAS
8/16/2021

UNITED CHRISTIAN ACADEMY
First Pentecostal Church
10619 Highway 69
Port Arthur, TX 77642

ISSUED FOR
SCHEMATIC DESIGN X
DATE: 10/6/2020
DESIGN DEVELOPMENT X
DATE: 3/5/2021
BIDS & CONSTRUCTION X
DATE: 8/2/2021
REVISION:
DATE:
REVISION:
DATE:
REVISION:
DATE:

DRAWINGS SHEET TITLE
SKETCHUP
EXTERIOR
ELEVATIONS

SHEET NUMBER
A400

20105
PROJECT NUMBER

SAVED: LEOT
PLOT: LEO TAN
PLOT DATE: 8/16/2021 1:56 PM
SHEET SIZE: ARCH expand D (36.00 x 24.00 Inches)

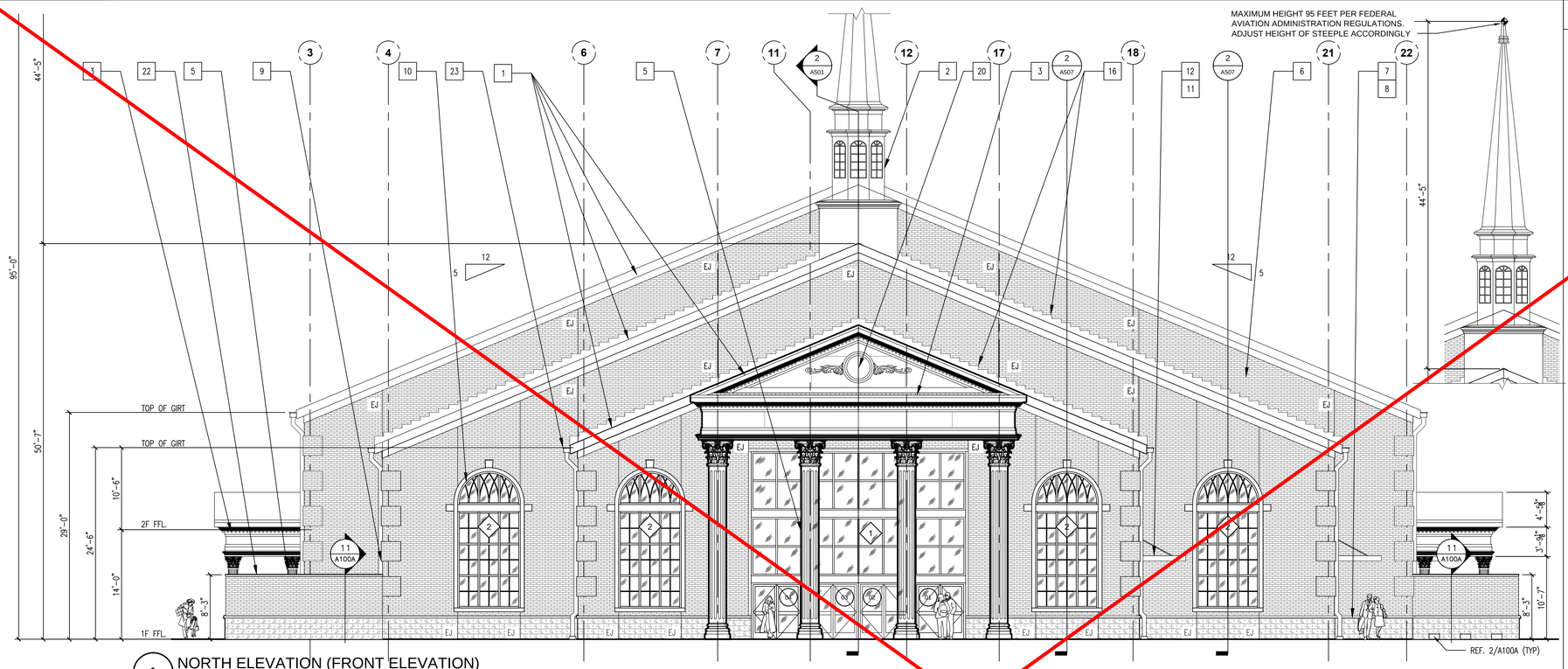

1 NORTH ELEVATION (FRONT ELEVATION)
SCALE: 1/8"=1'-0"

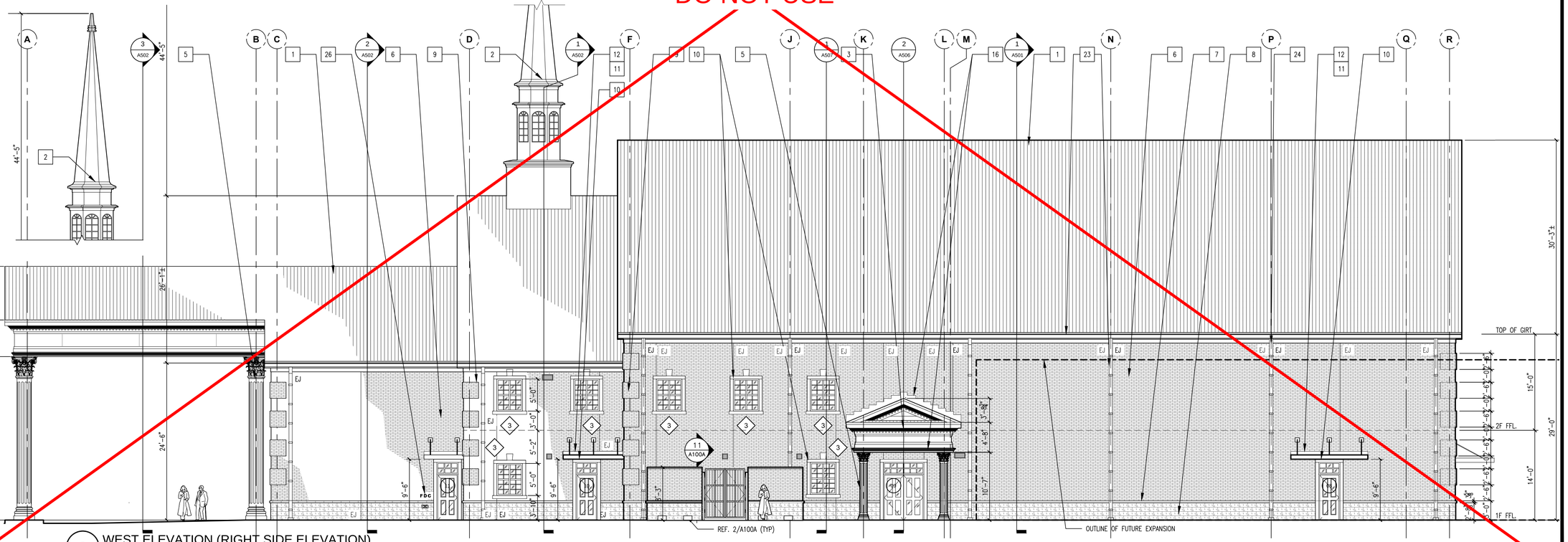

2 WEST ELEVATION (RIGHT SIDE ELEVATION)
SCALE: 1/8"=1'-0"

DO NOT USE

KEYNOTES

1. KYNAR FINISH STANDING SEAM METAL ROOF–TDI WINDSTORM RATED
2. FIBERGLASS STEEPLE UNIT 11 BY FIBERGLASS SPECIALTIES INC. GC TO COORDINATE HEIGHT–COMPLY WITH AIRPORT HEIGHT RESTRICTION)
3. POLYURETHANE COMPONENT MOULDINGS AT PEDIMENT AND ENTABLATURE – FYPON OR APPROVED EQUAL
4. HARDIE TEXTURED PANELS WITH SMOOTH SAND FINISH AND V–GROOVE SHIPLAP JOINTS
5. GFRC CLAD CORINTHIAN COLUMN – STORMBERG OR APPROVED EQUAL
6. KING SIZE FIELD BRICK – REF. SPECS.
7. CAST STONE WATER TABLE – REF. SPECS.
8. BURNISHED CMU BLOCKS – REF. SPECS.
9. KING SIZE BRICK QUOIN, TYP AT EXTERIOR CORNERS – REF. SPECS.
10. CAST STONE WRAP–AROUND AT OPENINGS, KEYSTONE, LINTEL, SILLS, – REF. SPECS.
11. KYNAR FINISH FLASHING AND THRU–WALL COUNTER FLASHING, TYP. APPLY SEALANT.
12. PRE–ENGINEERED WALL HUNG METAL CANOPY WITH BRACKETS ENGINEERED FOR WINDSTORM RATING SPECIFIED AT STRUCT. DRAWINGS – KYNAR FINISH BY PRE–ENG. METAL BLDG. MANUFACTURER
13. 1–HR ROOF/CEILING ASSEMBLY – UL #P516
14. 1–HR FLOOR/CEILING CONSTRUCTION – UL #G256
15. TEMPORARY WOOD STAIR FOR SECOND FLOOR ACCESS (BEYOND)
16. KYNAR FINISH STEP FLASHING AND THRU–WALL STEP COUNTER FLASHING, TYP.
17. 1–HR PROTECTION OF PRIMARY STRUCTURAL FRAME
18. LINER SYSTEM WITH 1X3 THERMAL SPACER BLOCKS. TOP LAYER R19 FIBERGLASS INSULATION DRAPED OVER TSB LINED STEEL PURLINS. BOTTOM LAYER R–11 FIBERGLASS INSULATION INSTALLED IN BETWEEN PURLINS OVER BLACK VINYL SHEET MEMBRANE AND HELD IN PLACE BY PAINTED BLACK GALV. STEEL BANDS ANCHORED TO STEEL PURLINS.
19. UNDERSIDE OF LINER SYSTEM (BLACK POLYETHYLENE VAPOR RETARDER LINER FABRIC) AND GALV. METAL SUPPORT STEEL BANDS, PAINTED BLACK.
20. POLYURETHANE EXTERIOR ORNAMENT INLAY AND CHURCH LOGO
21. METAL STUD BRACING AS REQUIRED, REF. STRUCTURAL
22. 8'–0" HIGH MECHANICAL YARD ENCLOSURE WITH 3'–0" WIDE, PAIR GATES AND 8" HIGH X 16" WIDE MASONRY AIR OPENING INLET AS SHOWN. REF SITE DETAILS AT A100A
23. KYNAR FINISH GUTTER WITH HANGERS @ 16" O.C. AND DOWNSPOUT WITH STRAPS @ 3'–0" O.C.
24. EXPANSION JOINT (E.J.) AS SHOWN. AT EAST AND WEST ELEVATION, LOCATION IS BEHIND DOWNSPOUTS.
25. FIRE DEPARTMENT CONNECTION (FDC) SIGN: GEMINI BOLD 6" HIGH CAST ALUMINUM LETTERS, COLOR: RED 2793, PROJECTED SPACER MOUNT
26. KYNAR FINISH "R" METAL PANELS
27. PROVIDE CONTROL JOINTS IN DRYWALL WHERE PARTITION TRAVERSES A CONSTRUCTION JOINT
28. PROVIDE CONTROL JOINT IN UNINTERRUPTED STRAIGHT PLANE DRYWALL SPACE AT 30'–0" LINEAR MAX
29. PROVIDE CONTROL JOINT IN CMU PARTITIONS SPACED 36'–0" MAX APART FOR INTERIOR PARTITIONS AND 30'–0" MAX APART FOR EXTERIOR PARTITIONS
30. PROVIDE EXPANSION JOINTS IN BRICK AS FOLLOWS:
    - 30.1. WINDOWS AND DOORS LESS THAN 6 FEET WIDE – ONE SIDE OF OPENING
    - 30.2. WINDOWS AND DOORS MORE THAN 6 FEET WIDE – BOTH SIDES OF OPENING
    - 30.3. AT LINTELS – AT BOTH ENDS

Architectural Alliance Incorporated
339 Pine Street, Suite 720
Edison Plaza
Beaumont, Texas 77701
TEL (409) 866-7196
FAX (409) 866-1745
J. ROSS CLARK, A.I.A.
RONALD M. JONES, A.I.A.
www.architectall.com

REGISTERED ARCHITECT JAMES R. CLARK 8212 STATE OF TEXAS
8/16/2021

REGISTERED ARCHITECT RONALD M. JONES 13662 STATE OF TEXAS
8/16/2021

Port Arthur, TX 77642

UNITED CHRISTIAN ACADEMY
First Pentecostal Church
10619 Highway 69

ISSUED FOR
SCHEMATIC DESIGN [X] DATE: 10/6/2020
DESIGN DEVELOPMENT [X] DATE: 3/5/2021
BIDS & CONSTRUCTION [X] DATE: 8/2/2021
REVISION: DATE:
REVISION: DATE:
REVISION: DATE:

DRAWINGS SHEET TITLE
EXTERIOR ELEVATIONS
REF. ADD #2
REF. ADD #1

SHEET NUMBER
A401

20105
PROJECT NUMBER

OWNERSHIP OF DRAWINGS THIS DOCUMENT AND THE IDEAS AND DESIGNS INCORPORATED HEREIN, AS AN INSTRUMENT OF PROFESSIONAL SERVICES, IS THE PROPERTY OF ARCHITECTURAL ALLIANCE INCORPORATED AND IS NOT TO BE USED, IN WHOLE OR IN PART, FOR ANY OTHER PROJECT WITHOUT THE WRITTEN AUTHORIZATION OF ARCHITECTURAL ALLIANCE INCORPORATED. © COPYRIGHT 2021

SAVED: LEOT
PLOT: LEO TAN
PLOT DATE: 8/16/2021 1:57 PM
SHEET SIZE: ARCH expand D (36.00 x 24.00 Inches)

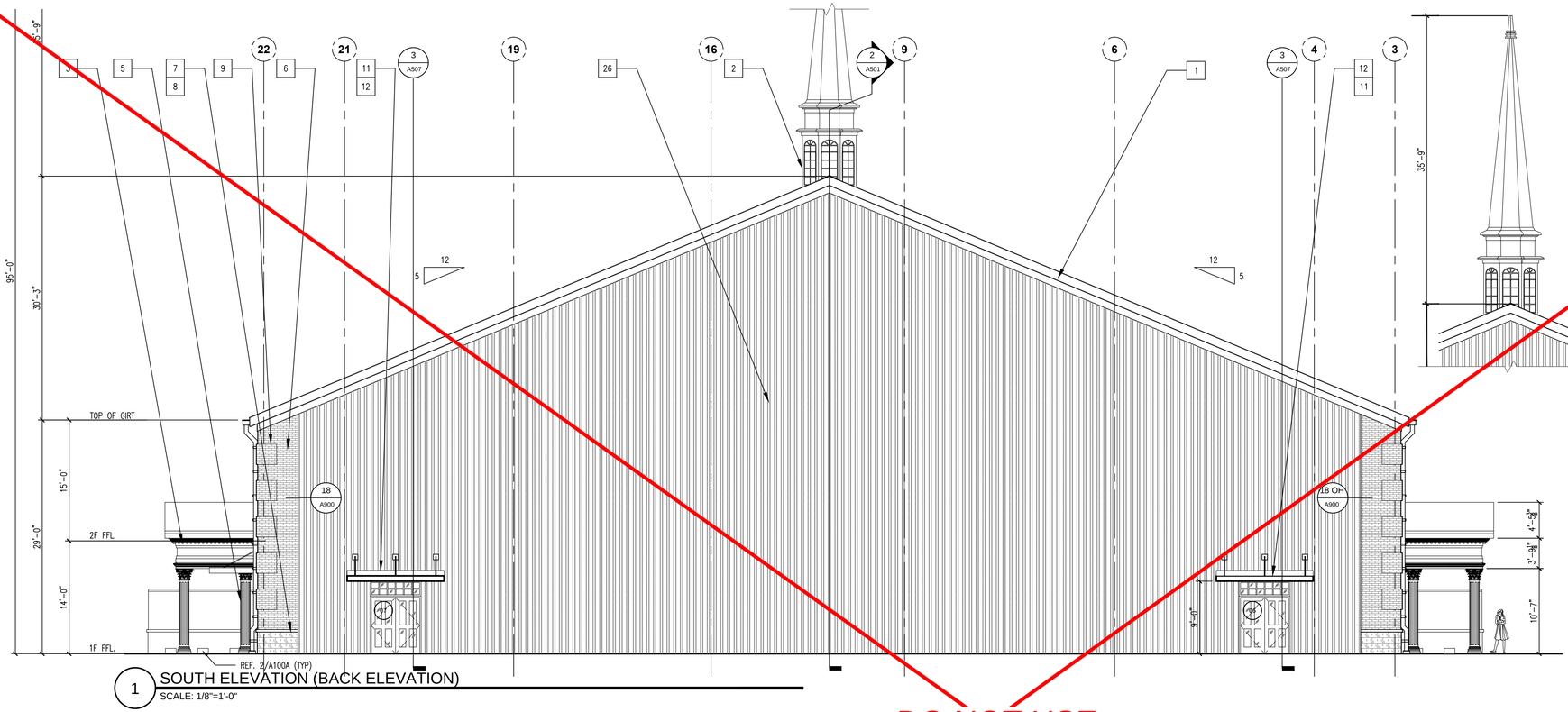

1 SOUTH ELEVATION (BACK ELEVATION)
SCALE: 1/8"=1'-0"

DO NOT USE

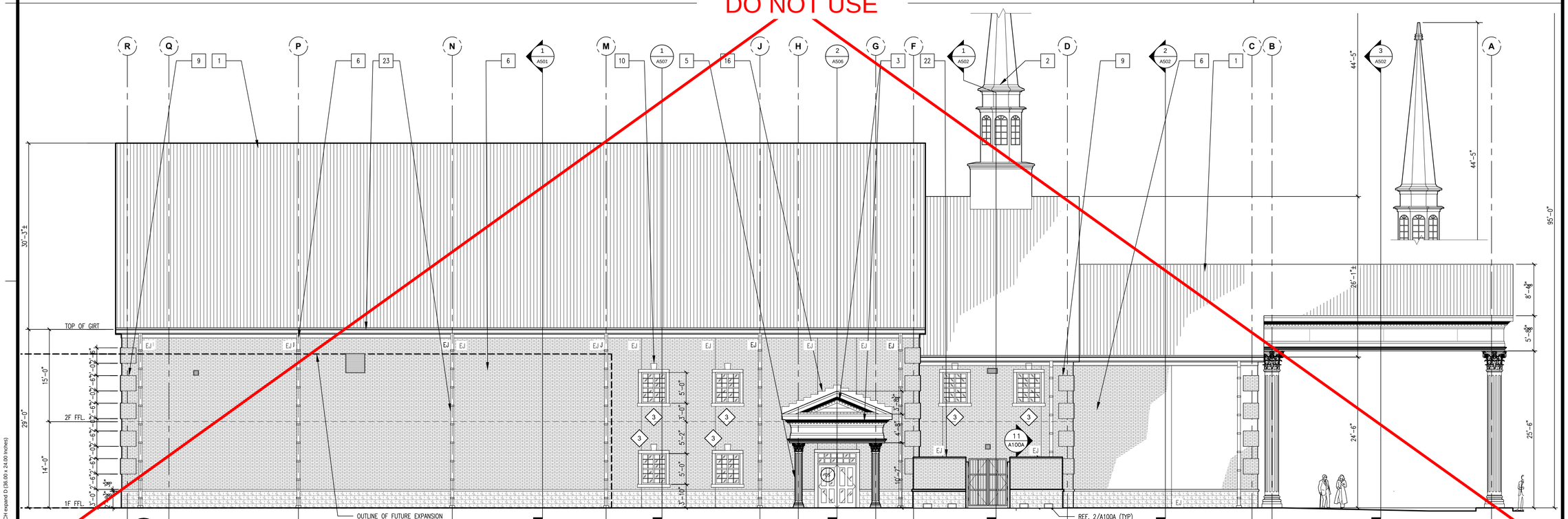

2 EAST ELEVATION (LEFT SIDE ELEVATION)
SCALE: 1/8"=1'-0"

KEYNOTES

1. KYNAR FINISH STANDING SEAM METAL ROOF–TDI WINDSTORM RATED
2. FIBERGLASS STEEPLE UNIT 11 BY FIBERGLASS SPECIALTIES INC. GC TO COORDINATE HEIGHT–COMPLY WITH AIRPORT HEIGHT RESTRICTION)
3. POLYURETHANE COMPONENT MOULDINGS AT PEDIMENT AND ENTABLATURE – FYPON OR APPROVED EQUAL
4. HARDIE TEXTURED PANELS WITH SMOOTH SAND FINISH AND 7" GROOVE SHIPLAP JOINTS
5. GFRC CLAD CORINTHIAN COLUMN – STORMBERG OR APPROVED EQUAL
6. KING SIZE FIELD BRICK – REF. SPECS.
7. CAST STONE WATER TABLE – REF. SPECS.
8. BURNISHED CMU BLOCKS – REF. SPECS.
9. KING SIZE BRICK QUOIN, TYP AT EXTERIOR CORNERS – REF. SPECS.
10. CAST STONE WRAP–AROUND AT OPENINGS, KEYSTONE, LINTEL, SILLS, – REF. SPECS.
11. KYNAR FINISH FLASHING AND THRU–WALL COUNTER FLASHING, TYP. APPLY SEALANT.
12. PRE–ENGINEERED WALL HUNG METAL CANOPY WITH BRACKETS ENGINEERED FOR WINDSTORM RATING SPECIFIED AT STRUCT. DRAWINGS – KYNAR FINISH BY PRE–ENG. METAL BLDG. MANUFACTURER
13. 1–HR ROOF/CEILING ASSEMBLY – UL #P516
14. 1–HR FLOOR/CEILING CONSTRUCTION – UL #G256
15. TEMPORARY WOOD STAIR FOR SECOND FLOOR ACCESS (BEYOND)
16. KYNAR FINISH STEP FLASHING AND THRU–WALL STEP COUNTER FLASHING, TYP.
17. 1–HR PROTECTION OF PRIMARY STRUCTURAL FRAME
18. LINER SYSTEM WITH 1X3 THERMAL SPACER BLOCKS. TOP LAYER R19 FIBERGLASS INSULATION DRAPED OVER TSB LINED STEEL PURLINS. BOTTOM LAYER R–11 FIBERGLASS INSULATION INSTALLED IN BETWEEN PURLINS OVER BLACK VINYL SHEET MEMBRANE AND HELD IN PLACE BY PAINTED BLACK GALV. STEEL BANDS ANCHORED TO STEEL PURLINS.
19. UNDERSIDE OF LINER SYSTEM (BLACK POLYETHYLENE VAPOR RETARDER LINER FABRIC) AND GALV. METAL SUPPORT STEEL BANDS, PAINTED BLACK.
20. POLYURETHANE EXTERIOR ORNAMENT INLAY AND CHURCH LOGO
21. METAL STUD BRACING AS REQUIRED, REF. STRUCTURAL
22. 8'–0" HIGH MECHANICAL YARD ENCLOSURE WITH 3'–0" WIDE, PAIR GATES AND 8" HIGH X 16" WIDE MASONRY AIR OPENING INLET AS SHOWN. REF SITE DETAILS AT A100A
23. KYNAR FINISH GUTTER WITH HANGERS @ 16" O.C. AND DOWNSPOUT WITH STRAPS @ 3'–0" O.C.
24. EXPANSION JOINT (E.J.) AS SHOWN. AT EAST AND WEST ELEVATION, LOCATION IS BEHIND DOWNSPOUTS.
25. FIRE DEPARTMENT CONNECTION (FDC) SIGN: GEMINI BOLD 6" HIGH CAST ALUMINUM LETTERS, COLOR: RED 2793, PROJECTED SPACER MOUNT
26. KYNAR FINISH "R" METAL PANELS
27. PROVIDE CONTROL JOINTS IN DRYWALL WHERE PARTITION TRAVERSES A CONSTRUCTION JOINT
28. PROVIDE CONTROL JOINT IN UNINTERRUPTED STRAIGHT PLANE DRYWALL SPACE AT 30'–0" LINEAR MAX
29. PROVIDE CONTROL JOINT IN CMU PARTITIONS SPACED 36'–0" MAX APART FOR INTERIOR PARTITIONS AND 30'–0" MAX APART FOR EXTERIOR PARTITIONS
30. PROVIDE EXPANSION JOINTS IN BRICK AS FOLLOWS:
    - 30.1. WINDOWS AND DOORS LESS THAN 6 FEET WIDE – ONE SIDE OF OPENING
    - 30.2. WINDOWS AND DOORS MORE THAN 6 FEET WIDE – BOTH SIDES OF OPENING
    - 30.3. AT LINTELS – AT BOTH ENDS

Architectural Alliance Incorporated
350 Pine Street, Suite 720
Beaumont, Texas 77701
TEL (409) 866-7196
FAX (409) 866-7145
J. ROB CLARK, A.I.A.
RONALD M. JONES, A.I.A.
www.architectsatt.com

REGISTERED ARCHITECT JAMES R. CLARK 8217 STATE OF TEXAS
8/16/2021

REGISTERED ARCHITECT RONALD M. JONES 13662 STATE OF TEXAS
8/16/2021

UNITED CHRISTIAN ACADEMY
First Pentecostal Church
10619 Highway 69
Port Arthur, TX 77642

ISSUED FOR
SCHEMATIC DESIGN [X]
DATE: 10/6/2020
DESIGN DEVELOPMENT [X]
DATE: 3/5/2021
BIDS & CONSTRUCTION [X]
DATE: 8/2/2021
REVISION:
DATE:
REVISION:
DATE:
REVISION:
DATE:

DRAWINGS SHEET TITLE
EXTERIOR ELEVATIONS
REF. ADD #2
REF. ADD #1

SHEET NUMBER
~~A402~~

20105
PROJECT NUMBER

OWNERSHIP OF DRAWINGS THIS DOCUMENT AND THE IDEAS AND DESIGNS INCORPORATED HEREIN, AS AN INSTRUMENT OF PROFESSIONAL SERVICES, IS THE PROPERTY OF ARCHITECTURAL ALLIANCE INCORPORATED AND IS NOT TO BE USED, IN WHOLE OR IN PART, FOR ANY OTHER PROJECT WITHOUT THE WRITTEN AUTHORIZATION OF ARCHITECTURAL ALLIANCE INCORPORATED. © COPYRIGHT 2021

SAVED: LEOT
PLOT: LEO TAN
PLOT DATE: 8/16/2021 1:58 PM
SHEET SIZE: ARCH expand D (36.00 x 24.00 Inches)

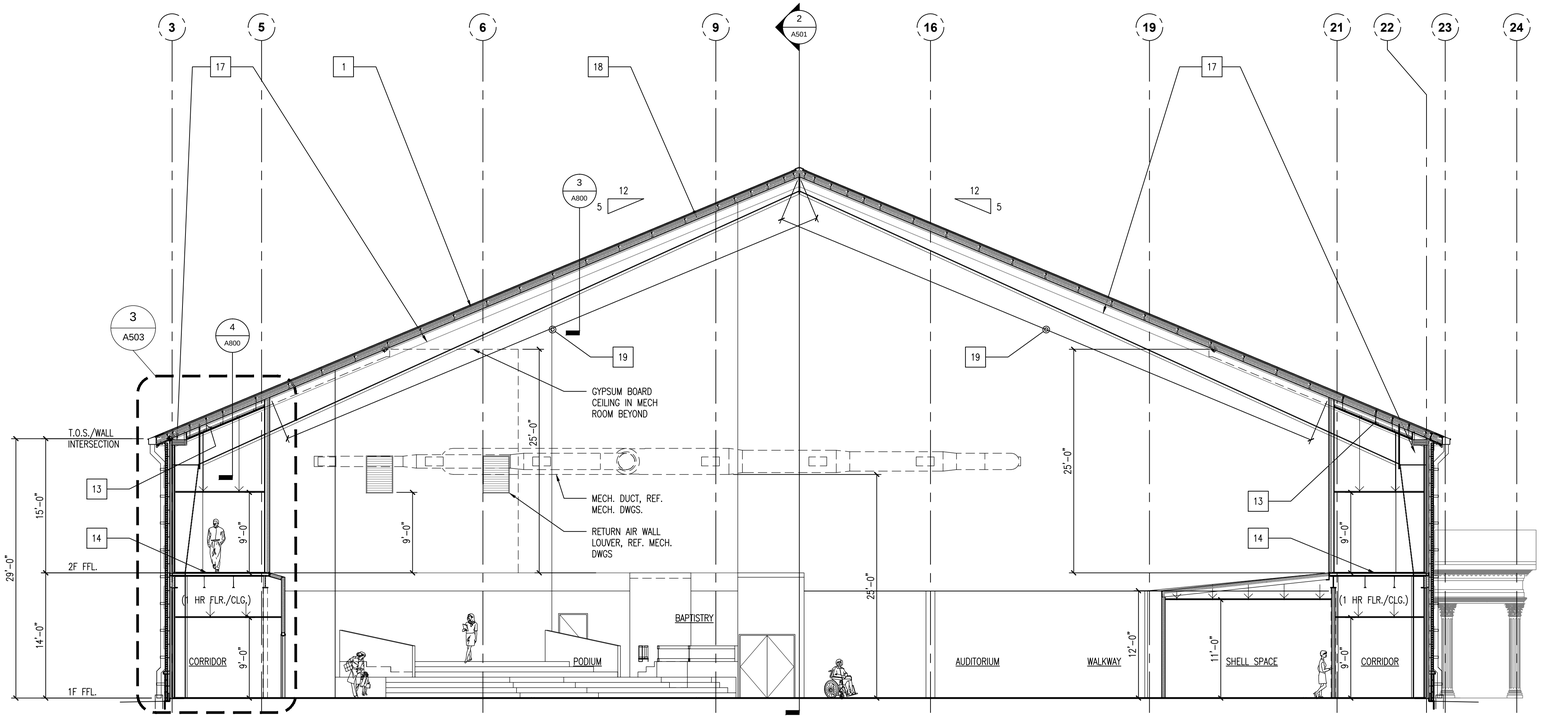

1 CROSS SECTION
SCALE: 1/8"=1'-0"

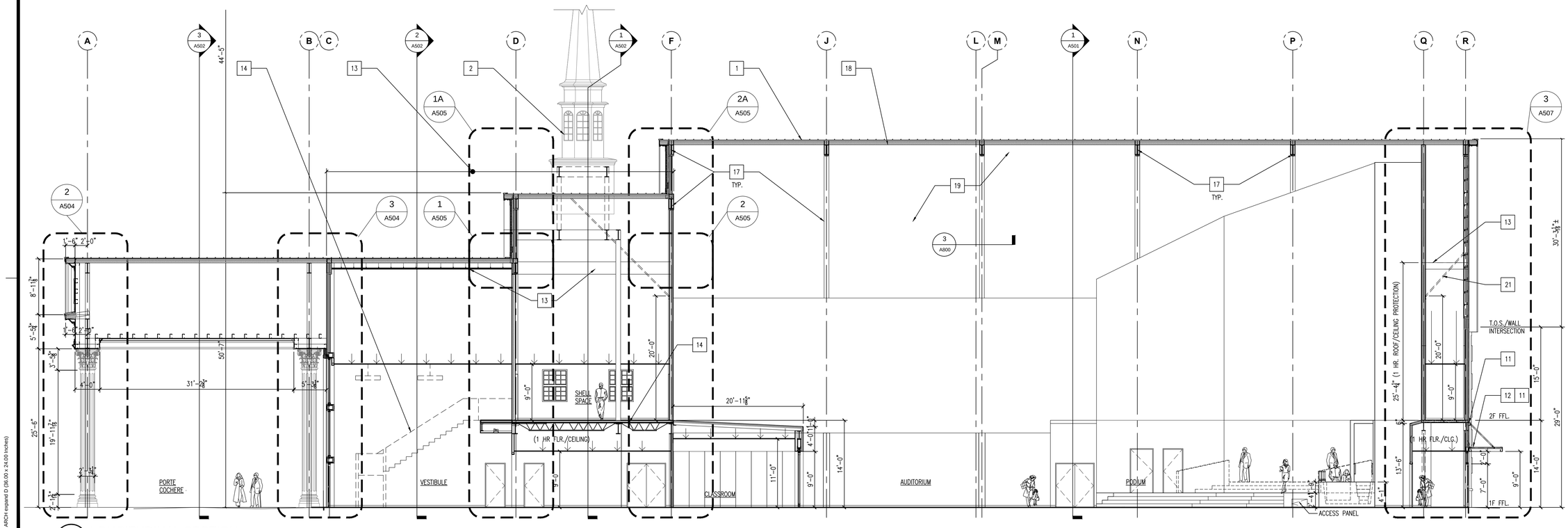

2 LONGITUDINAL SECTION
SCALE: 1/8"=1'-0"

KEYNOTES

1. KYNAR FINISH STANDING SEAM METAL ROOF–TDI WINDSTORM RATED
2. FIBERGLASS STEEPLE UNIT 11 BY FIBERGLASS SPECIALTIES INC. GC TO COORDINATE HEIGHT–COMPLY WITH AIRPORT HEIGHT RESTRICTION)
3. POLYURETHANE COMPONENT MOULDINGS AT PEDIMENT AND ENTABLATURE – FYPON OR APPROVED EQUAL
4. HARDIE TEXTURED PANELS WITH SMOOTH SAND FINISH AND V–GROOVE SHIPLAP JOINTS
5. GFRC CLAD CORINTHIAN COLUMN – STORMBERG OR APPROVED EQUAL
6. KING SIZE FIELD BRICK – REF. SPECS.
7. CAST STONE WATER TABLE – REF. SPECS.
8. BURNISHED CMU BLOCKS – REF. SPECS.
9. KING SIZE BRICK QUOIN, TYP AT EXTERIOR CORNERS – REF. SPECS.
10. CAST STONE WRAP–AROUND AT OPENINGS, KEYSTONE, LINTEL, SILLS, – REF. SPECS.
11. KYNAR FINISH FLASHING AND THRU–WALL COUNTER FLASHING, TYP. APPLY SEALANT.
12. PRE–ENGINEERED WALL HUNG METAL CANOPY WITH BRACKETS ENGINEERED FOR WINDSTORM RATING SPECIFIED AT STRUCT. DRAWINGS – KYNAR FINISH BY PRE–ENG. METAL BLDG. MANUFACTURER
13. 1–HR ROOF/CEILING ASSEMBLY – UL #P516
14. 1–HR FLOOR/CEILING CONSTRUCTION – UL #G256
15. TEMPORARY WOOD STAIR FOR SECOND FLOOR ACCESS (BEYOND)
16. KYNAR FINISH STEP FLASHING AND THRU–WALL STEP COUNTER FLASHING, TYP.
17. 1–HR PROTECTION OF PRIMARY STRUCTURAL FRAME
18. LINER SYSTEM WITH 1X3 THERMAL SPACER BLOCKS. TOP LAYER R19 FIBERGLASS INSULATION DRAPED OVER TSB LINED STEEL PURLINS. BOTTOM LAYER R–11 FIBERGLASS INSULATION INSTALLED IN BETWEEN PURLINS OVER BLACK VINYL SHEET MEMBRANE AND HELD IN PLACE BY PAINTED BLACK GALV. STEEL BANDS ANCHORED TO STEEL PURLINS.
19. UNDERSIDE OF LINER SYSTEM (BLACK POLYETHYLENE VAPOR RETARDER LINER FABRIC) AND GALV. METAL SUPPORT STEEL BANDS, PAINTED BLACK.
20. POLYURETHANE EXTERIOR ORNAMENT INLAY AND CHURCH LOGO
21. METAL STUD BRACING AS REQUIRED, REF. STRUCTURAL
22. 8'–0" HIGH MECHANICAL YARD ENCLOSURE WITH 3'–0" WIDE, PAIR GATES AND 8" HIGH X 16" WIDE MASONRY AIR OPENING INLET AS SHOWN. REF SITE DETAILS AT A100A
23. KYNAR FINISH GUTTER WITH HANGERS @ 16" O.C. AND DOWNSPOUT WITH STRAPS @ 3'–0" O.C.
24. EXPANSION JOINT (E.J.) AS SHOWN. AT EAST AND WEST ELEVATION, LOCATION IS BEHIND DOWNSPOUTS.
25. FIRE DEPARTMENT CONNECTION (FDC) SIGN: GEMINI BOLD 6" HIGH CAST ALUMINUM LETTERS, COLOR: RED 2793, PROJECTED SPACER MOUNT
26. KYNAR FINISH "R" METAL PANELS
27. PROVIDE CONTROL JOINTS IN DRYWALL WHERE PARTITION TRAVERSES A CONSTRUCTION JOINT
28. PROVIDE CONTROL JOINT IN UNINTERRUPTED STRAIGHT PLANE DRYWALL SPACE AT 30'–0" LINEAR MAX
29. PROVIDE CONTROL JOINT IN CMU PARTITIONS SPACED 36'–0" MAX APART FOR INTERIOR PARTITIONS AND 30'–0" MAX APART FOR EXTERIOR PARTITIONS
30. PROVIDE EXPANSION JOINTS IN BRICK AS FOLLOWS:
    - 30.1. WINDOWS AND DOORS LESS THAN 6 FEET WIDE – ONE SIDE OF OPENING
    - 30.2. WINDOWS AND DOORS MORE THAN 6 FEET WIDE – BOTH SIDES OF OPENING
    - 30.3. AT LINTELS – AT BOTH ENDS

Architectural Alliance Incorporated
339 Pine Street, Suite 720
Edison Plaza
Beaumont, Texas 77701
TEL (409) 866-7166
FAX (409) 866-1745
J. ROSS CLARK, A.I.A.
RONALD M. JONES, A.I.A.
www.archtexstat.com

REGISTERED ARCHITECT JAMES R. CLARK 8212 STATE OF TEXAS
8/16/2021

REGISTERED ARCHITECT RONALD M. JONES 13662 STATE OF TEXAS
8/16/2021

UNITED CHRISTIAN ACADEMY
First Pentecostal Church
10619 Highway 69
Port Arthur, TX 77642

ISSUED FOR
SCHEMATIC DESIGN X
DATE: 10/6/2020
DESIGN DEVELOPMENT X
DATE: 3/5/2021
BIDS & CONSTRUCTION X
DATE: 8/2/2021
REVISION:
DATE:
REVISION:
DATE:
REVISION:
DATE:

DRAWINGS SHEET TITLE
BUILDING SECTIONS

SHEET NUMBER
A501

20105
PROJECT NUMBER

OWNERSHIP OF DRAWINGS THIS DOCUMENT AND THE IDEAS AND DESIGNS INCORPORATED HEREIN, AS AN INSTRUMENT OF PROFESSIONAL SERVICES, IS THE PROPERTY OF ARCHITECTURAL ALLIANCE INCORPORATED AND IS NOT TO BE USED, IN WHOLE OR IN PART, FOR ANY OTHER PROJECT WITHOUT THE WRITTEN AUTHORIZATION OF ARCHITECTURAL ALLIANCE INCORPORATED. © COPYRIGHT 2021

SAVED: LEOT
PLOT: LEO TAN
PLOT DATE: 8/16/2021 1:59 PM
SHEET SIZE: ARCH expand D (36.00 x 24.00 Inches)

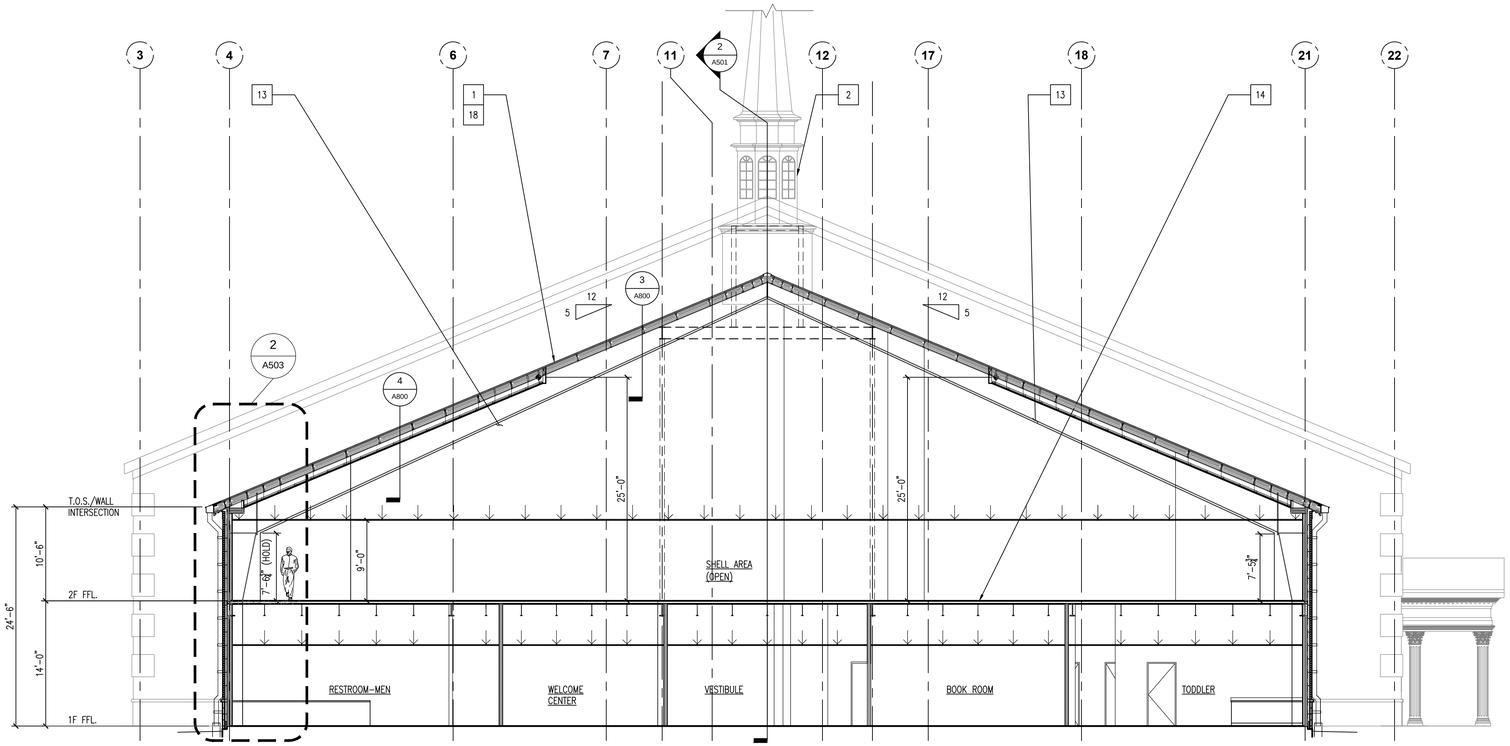

1 CROSS SECTION
SCALE: 1/8"=1'-0"

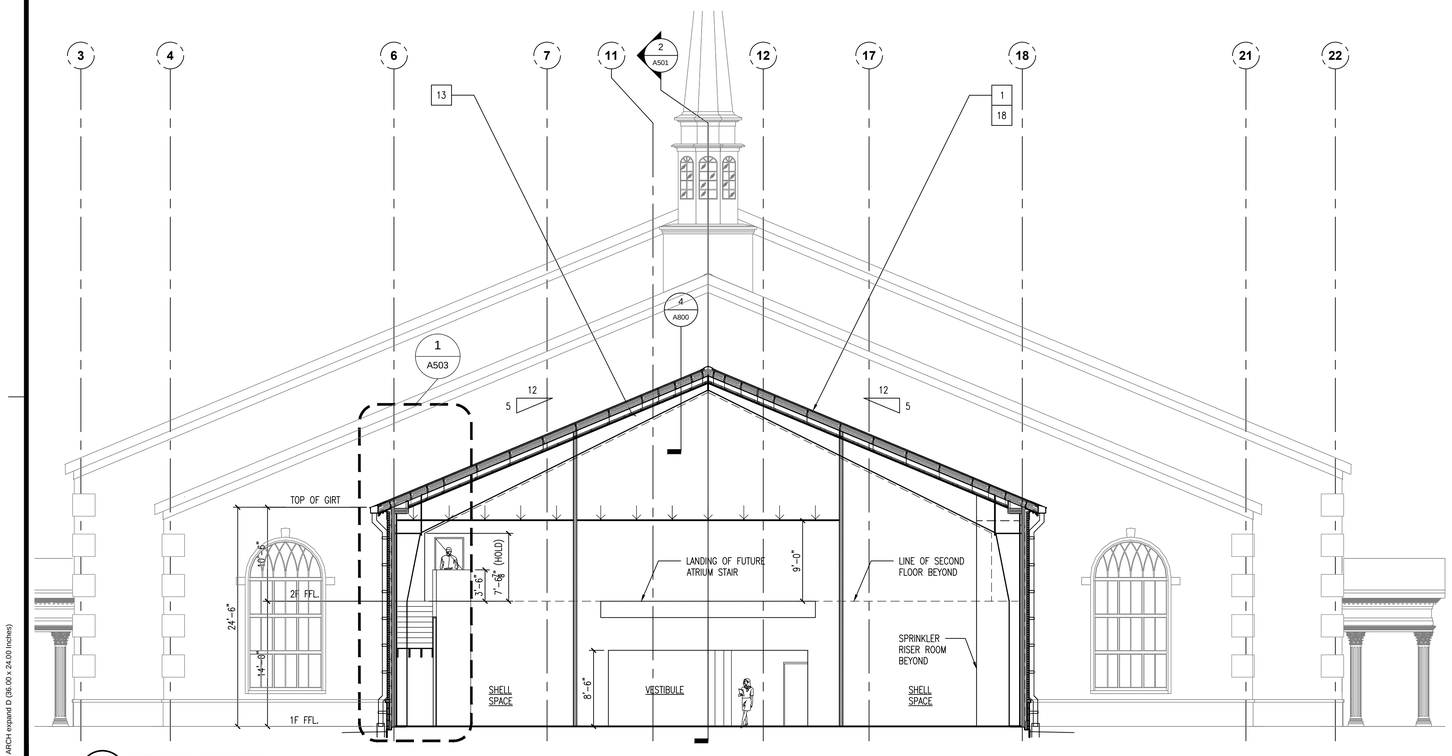

2 CROSS SECTION
SCALE: 1/8"=1'-0"

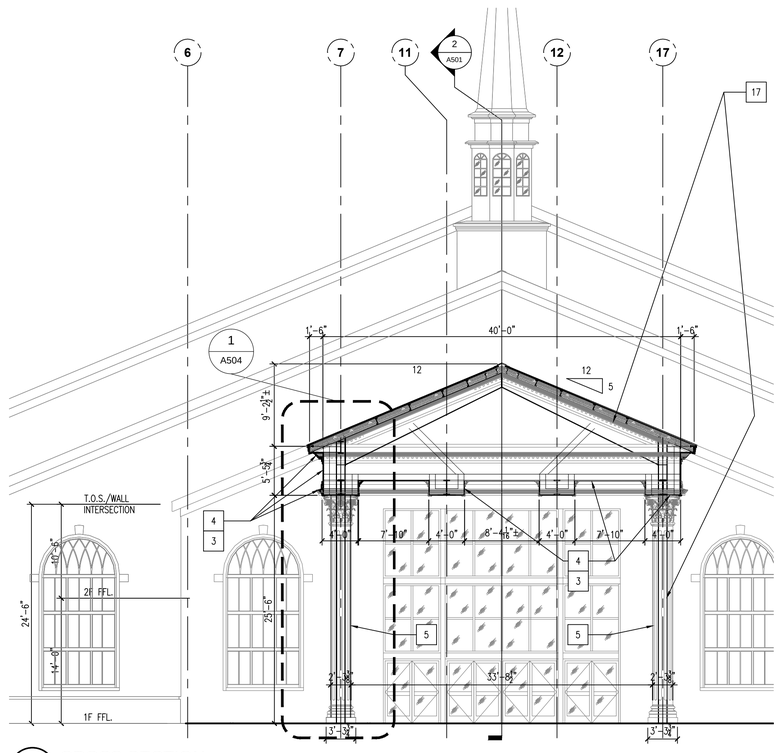

3 CROSS SECTION
SCALE: 1/8"=1'-0"

KEYNOTES

1. KYNAR FINISH STANDING SEAM METAL ROOF–TDI WINDSTORM RATED
2. FIBERGLASS STEEPLE UNIT 11 BY FIBERGLASS SPECIALTIES INC. GC TO COORDINATE HEIGHT–COMPLY WITH AIRPORT HEIGHT RESTRICTION)
3. POLYURETHANE COMPONENT MOULDINGS AT PEDIMENT AND ENTABLATURE – FYPON OR APPROVED EQUAL
4. HARDIE TEXTURED PANELS WITH SMOOTH SAND FINISH AND V–GROOVE SHIPLAP JOINTS
5. GFRC CLAD CORINTHIAN COLUMN – STORMBERG OR APPROVED EQUAL
6. KING SIZE FIELD BRICK – REF. SPECS.
7. CAST STONE WATER TABLE – REF. SPECS.
8. BURNISHED CMU BLOCKS – REF. SPECS.
9. KING SIZE BRICK QUOIN, TYP AT EXTERIOR CORNERS – REF. SPECS.
10. CAST STONE WRAP–AROUND AT OPENINGS, KEYSTONE, LINTEL, SILLS, – REF. SPECS.
11. KYNAR FINISH FLASHING AND THRU–WALL COUNTER FLASHING, TYP. APPLY SEALANT.
12. PRE–ENGINEERED WALL HUNG METAL CANOPY WITH BRACKETS ENGINEERED FOR WINDSTORM RATING SPECIFIED AT STRUCT. DRAWINGS – KYNAR FINISH BY PRE–ENG. METAL BLDG. MANUFACTURER
13. 1–HR ROOF/CEILING ASSEMBLY – UL #P516
14. 1–HR FLOOR/CEILING CONSTRUCTION – UL #G256
15. TEMPORARY WOOD STAIR FOR SECOND FLOOR ACCESS (BEYOND)
16. KYNAR FINISH STEP FLASHING AND THRU–WALL STEP COUNTER FLASHING, TYP.
17. 1–HR PROTECTION OF PRIMARY STRUCTURAL FRAME
18. LINER SYSTEM WITH 1X3 THERMAL SPACER BLOCKS. TOP LAYER R19 FIBERGLASS INSULATION DRAPED OVER TSB LINED STEEL PURLINS. BOTTOM LAYER R–11 FIBERGLASS INSULATION INSTALLED IN BETWEEN PURLINS OVER BLACK VINYL SHEET MEMBRANE AND HELD IN PLACE BY PAINTED BLACK GALV. STEEL BANDS ANCHORED TO STEEL PURLINS.
19. UNDERSIDE OF LINER SYSTEM (BLACK POLYETHYLENE VAPOR RETARDER LINER FABRIC) AND GALV. METAL SUPPORT STEEL BANDS, PAINTED BLACK.
20. POLYURETHANE EXTERIOR ORNAMENT INLAY AND CHURCH LOGO
21. METAL STUD BRACING AS REQUIRED, REF. STRUCTURAL
22. 8'–0" HIGH MECHANICAL YARD ENCLOSURE WITH 3'–0" WIDE, PAIR GATES AND 8" HIGH X 16" WIDE MASONRY AIR OPENING INLET AS SHOWN. REF SITE DETAILS AT A100A
23. KYNAR FINISH GUTTER WITH HANGERS @ 16" O.C. AND DOWNSPOUT WITH STRAPS @ 3'–0" O.C.
24. EXPANSION JOINT (E.J.) AS SHOWN. AT EAST AND WEST ELEVATION, LOCATION IS BEHIND DOWNSPOUTS.
25. FIRE DEPARTMENT CONNECTION (FDC) SIGN: GEMINI BOLD 6" HIGH CAST ALUMINUM LETTERS, COLOR: RED 2793, PROJECTED SPACER MOUNT
26. KYNAR FINISH "R" METAL PANELS
27. PROVIDE CONTROL JOINTS IN DRYWALL WHERE PARTITION TRAVERSES A CONSTRUCTION JOINT
28. PROVIDE CONTROL JOINT IN UNINTERRUPTED STRAIGHT PLANE DRYWALL SPACE AT 30'–0" LINEAR MAX
29. PROVIDE CONTROL JOINT IN CMU PARTITIONS SPACED 36'–0" MAX APART FOR INTERIOR PARTITIONS AND 30'–0" MAX APART FOR EXTERIOR PARTITIONS
30. PROVIDE EXPANSION JOINTS IN BRICK AS FOLLOWS:
    - 30.1. WINDOWS AND DOORS LESS THAN 6 FEET WIDE – ONE SIDE OF OPENING
    - 30.2. WINDOWS AND DOORS MORE THAN 6 FEET WIDE – BOTH SIDES OF OPENING
    - 30.3. AT LINTELS – AT BOTH ENDS

Architectural Alliance Incorporated
339 Pine Street, Suite 720
Ednon Plaza
Beaumont, Texas 77701
TEL (409) 866-7196
FAX (409) 866-1745
J. ROSS CLARK, A.I.A.
RONALD M. JONES, A.I.A.
www.archtexas.com

REGISTERED ARCHITECT JAMES R. CLARK 8212 STATE OF TEXAS
8/16/2021

REGISTERED ARCHITECT RONALD M. JONES 13662 STATE OF TEXAS
8/16/2021

Port Arthur, TX 77642

UNITED CHRISTIAN ACADEMY

First Pentecostal Church

10619 Highway 69

ISSUED FOR
SCHEMATIC DESIGN X
DATE: 10/6/2020
DESIGN DEVELOPMENT X
DATE: 3/5/2021
BIDS & CONSTRUCTION X
DATE: 8/2/2021
REVISION:
DATE:
REVISION:
DATE:
REVISION:
DATE:

DRAWINGS SHEET TITLE
BUILDING SECTIONS

SHEET NUMBER
A502

20105
PROJECT NUMBER

OWNERSHIP OF DRAWINGS THIS DOCUMENT AND THE IDEAS AND DESIGNS INCORPORATED HEREIN, AS AN INSTRUMENT OF PROFESSIONAL SERVICES, IS THE PROPERTY OF ARCHITECTURAL ALLIANCE INCORPORATED AND IS NOT TO BE USED, IN WHOLE OR IN PART, FOR ANY OTHER PROJECT WITHOUT THE WRITTEN AUTHORIZATION OF ARCHITECTURAL ALLIANCE INCORPORATED. © COPYRIGHT 2021

SAVED: MICHAELM
PLOT: LEO TAN
PLOT DATE: 8/16/2021 1:59 PM
SHEET SIZE: ARCH expand D (36.00 x 24.00 Inches)

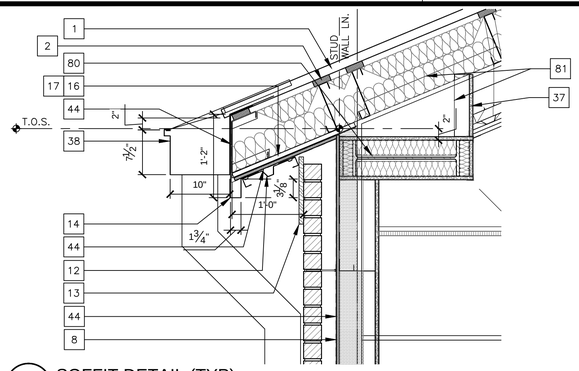

4 SOFFIT DETAIL (TYP)
SCALE: 1"=1'-0"

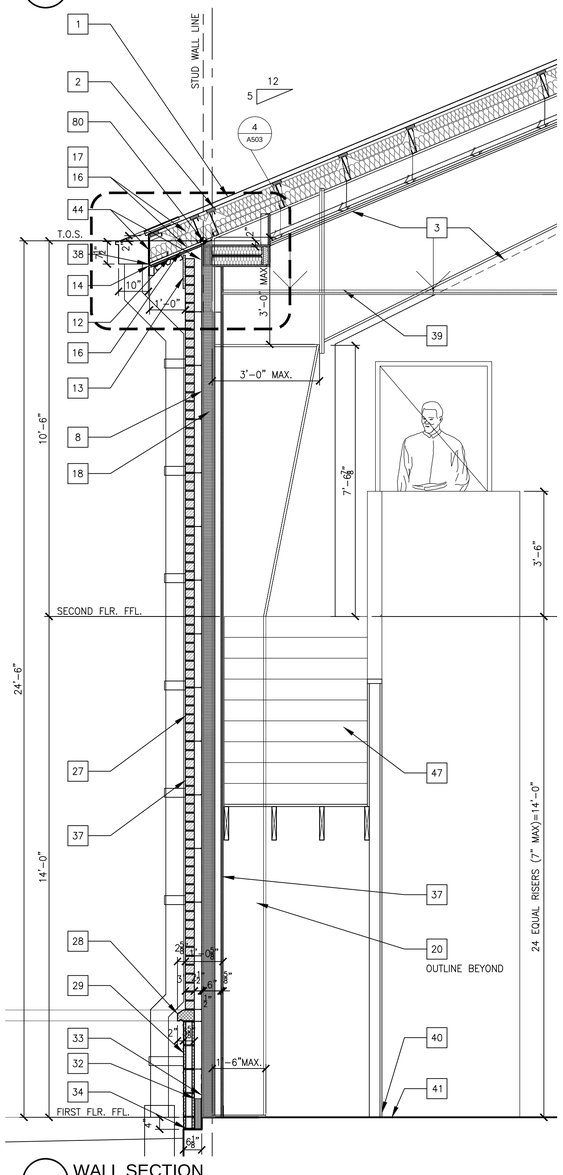

1 WALL SECTION
SCALE: 1/2"=1'-0"

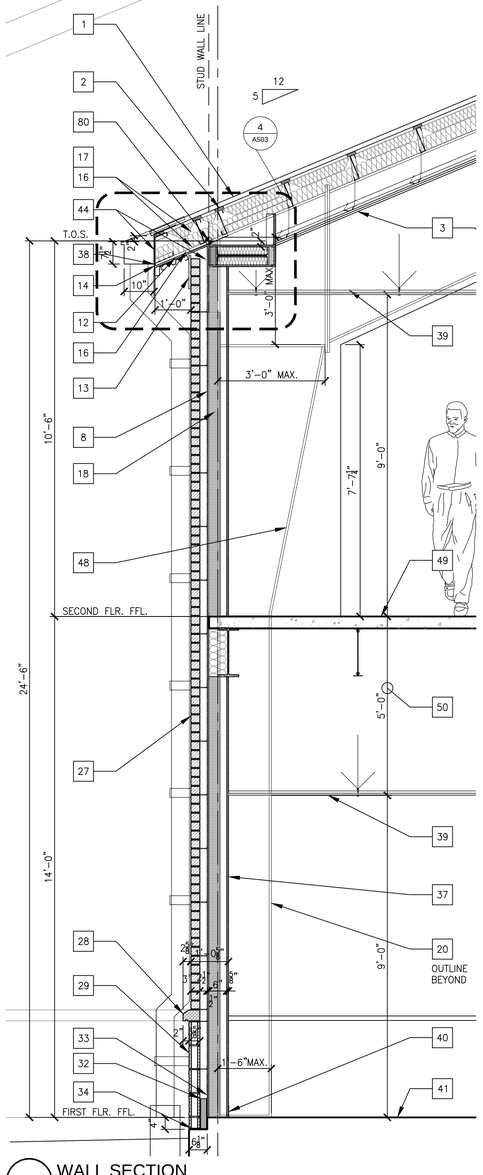

2 WALL SECTION
SCALE: 1/2"=1'-0"

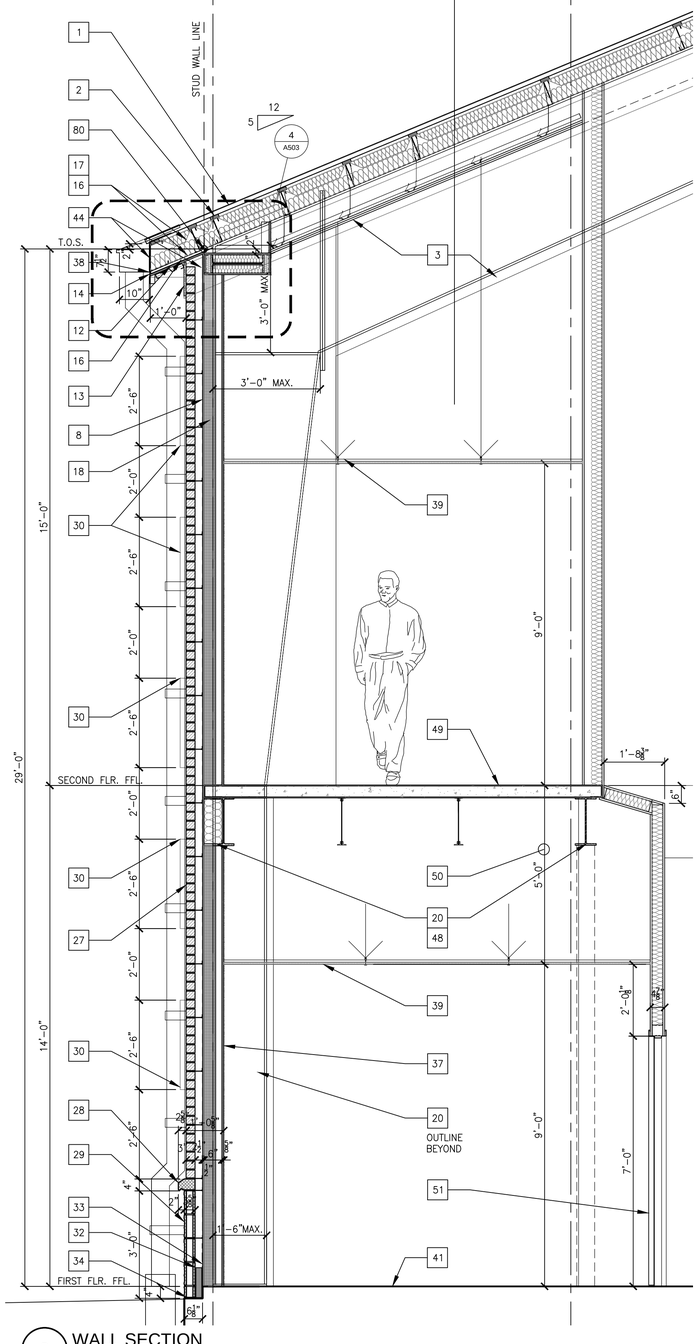

3 WALL SECTION
SCALE: 1/2"=1'-0"

WALL SECTION KEYNOTES

1. KYNAR FINISH STANDING SEAM METAL ROOF–TDI WINDSTORM RATED
2. LINER SYSTEM WITH 1X3 THERMAL SPACER BLOCKS. R–19 TOP LAYER DRAPED OVER THERMAL SPACER BLOCK LINED STEEL PURLINS. R–11 BOTTOM LAYER VINYL FACED INSTALLED IN BETWEEN PURLINS AND HELD IN PLACE BY GALV. STEEL BANDS ANCHORED TO STEEL PURLINS.
3. 1 HR. ROOF/CEILING ASSEMBLY (UL #P516). REF. CEILING PLAN.
4. STEEPLE UNIT 11 BY FIBERGLASS SPECIALTIES INC. GC TO COORDINATE HEIGHT–COMPLY WITH AIRPORT HEIGHT RESTRICTION)
5. KYNAR FINISH RAKE
6. PRE–ENGINEERED WALL HUNG METAL CANOPY WITH BRACKETS ENGINEERED FOR WINDSTORM RATING SPECIFIED AT STRUCT. DRAWINGS – KYNAR FINISH BY PRE–ENG. METAL BLDG. MANUFACTURER
7. 6" METAL STUDS, REF. STRUCTURAL FOR GAUGE AND SPACING AT DIFFERENT ZONES.
8. LIQUID APPLIED AIR, MOISTURE AND VAPOR BARRIER OVER ½" DENSGLASS SHEATHING OVER 6" METAL STUDS (REF. STRUCT. FOR GAUGE AND SPACING).
9. POLYURETHANE MOULDING AND HARDIE PANEL SMOOTH SAND FINISH –
10. GFRC CLAD CORINTHIAN COLUMN BY STROMBERG OR APPROVED EQUAL –
11. KYNAR FINISH METAL PANEL SIDING
12. KYNAR FINISH METAL PANEL CEILING OVER LIQUID APPLIED WEATHER BARRIER OVER ½" THICK DENSGLASS SHEATHING OVER ⅞" FURRING HAT CHANNEL SPACED @ 16" O.C. SCREWED TO STEEL PURLINS
13. HARDIE BOARD 1X12 FINISH TRIM
14. KYNAR FINISH EAVE TRIM, TYPE A
15. 8" STEEL GIRT, REF. PEMB DRAWINGS
16. TOP FLANGE EAVE EXTENSION WELDED TO RIGID FRAME TO SUPPORT EAVE STRUT AND PURLINS BY PEMB
17. RAFTER EXTENSION OR TOP FLANGE EXTENSION BY PEMB
18. R25 CLOSED CELL SPRAY INSULATION
19. KYNAR FINISH THRU WALL FLASHING AND COUNTERFLASHING.
20. STRUCTURAL STEEL FRAME BY PRE–ENGINEERED METAL BUILDING MANUFACTURER. REF. SPECIFICATIONS.
21. STEEL ANGLE BY PEMB
22. INSULATED HM DOOR AND FRAME, REF. SCHED.
23. STEEL SUPPORT FRAMING FOR ATTACHMENT OF APPENDAGES BY PEMB
24. POLYURETHANE COMPONENT MOULDINGS ON PEDIMENT AND ENTABLATURE – FYPON OR APPROVED EQUAL
25. HARDIE TEXTURED PANEL SMOOTH FINISH (TYPICAL)
26. FIBERGLASS CLAD CORINTHIAN COLUMN – PROVIDE WATERPROOF CLOSURE BLOCK ON TOP AND SEALANT.
27. KING SIZE FIELD BRICK WITH GALV. BRICK REINFORCING AT 16" O.C. VERTICAL AND HORIZONTAL (STAGGERED) – REF. SPECS.
28. CAST STONE WATER TABLE – REF. SPECS.
29. BURNISHED CMU BLOCKS – REF. SPECS.
30. KING SIZE BRICK QUOIN, TYP AT EXTERIOR CORNERS – REF. SPECS.
31. CAST STONE WRAP AROUND AT OPENINGS, KEYSTONE, SILL, – REF. SPECS.
32. MORTAR NET, TYP. (ABOVE FLASHING)
33. SELF ADHERED BASE FLASHING WITH TOP TERMINATION BAR
34. WEEPS AT 20" O.C.
35. KYNAR FINISH FLASHING AND THRU–WALL STEP COUNTER FLASHING, TYP.
36. PRE–ENGINEERED WALL HUNG METAL CANOPY WITH BRACKETS ENGINEERED FOR WINDSTORM RATING SPECIFIED AT STRUCT. DRAWINGS – KYNAR FINISH BY PRE–ENG. METAL BLDG. MANUFACTURER
37. 5/8" TYPE 'X' GYPSUM BOARD, TYP. U.N.O.
38. KYNAR FINISH GUTTER WITH HANGERS @ 16" O.C. AND 6"X6" DOWNSPOUT WITH STRAPS @ 3'–0" O.C. REFERENCE CIVIL FOR DOWNSPOUT ADAPTER TO STORM SEWER PIPE CONNECTION.
39. FINISHED CEILING, REF. CEILING PLAN
40. BASE AS SCHED.
41. FINISHED FLOOR, REF. SCHED.
42. ADA ALUM. THRESHOLD, VERIFY RATING AT DOOR SCHED.
43. 15 MIL VAPOR BARRIER UNDER SLAB, REF. SPECIFICATION
44. SELF ADHERING AIR, VAPOR AND MOISTURE BARRIER AT WALL AND ROOF INTERSECTION, TYPICAL UNLESS NOTED OTHERWISE.
45. CORNER BEAD, TYP. AT CORNERS
46. R–13 UNFACED BATT INSULATION
47. TEMPORARY ACCESS STAIR – WOOD CONSTRUCTION
48. 1–HR. PROTECTED PRIMARY STRUCTURAL MEMBER (UL #X528).
49. CONCRETE FILLED METAL DECK OVER STRUCT. FRAMING MEMBERS, REF. STRUCT.
50. 1–HR. FLOOR–CEILING ASSEMBLY (UL #G256)
51. DOOR PER SCHEDULE
52. 8" STRUCTURAL CEE FRAMING MEMBERS @ 24" O.C.
53. KYNAR FINISH EAVE TRIM TYPE "B" WITH CONT. CLEAT AND SEALANT.
54. 8X8 TUBE STEEL STRUCTURAL FRAME FOR HURRICANE IMPACT STOREFRONT WINDOWS SUPPORT
55. COLONIAL STYLE HURRICANE IMPACT RESISTANT STOREFRONT WINDOWS/ DOORS
56. 4X8 TUBE STEEL STRUCTURAL FRAME (BY PEMB) FOR WALL HUNG METAL CANOPY. PROVIDE TUBE ATTACHMENT TO STEEL STRUCTURE (BY PEMB).
57. EXPOSED STRUCTURE PAINT ALL SURFACES BLACK. REF. INTERIOR ELEVATIONS
58. KYNAR FINISH BASE TRIM WITH DRIP
59. NOT USED
60. CONCRETE SIDEWALK, REF. CIVIL
61. KYNAR FINISH EDGE TRIM
62. CONCRETE SLAB OVER METAL DECK, REF. PEMB DRAWINGS
63. STEEL BEAM, REF. PEMB DRAWINGS
64. STEEL ANGLE, REF. PEMB DRAWINGS
65. 3 ⅝" METAL STUD @ 16" O.C. WITH ⅝" TYPE 'X' GYPSUM BOARD ON ONE SIDE
66. 2 ½" METAL STUD @ 16" O.C. WITH ⅝" TYPE 'X' GYPSUM BOARD ON ONE SIDE
67. CONCRETE DRIVE, REF. CIVIL DRAWINGS
68. KYNAR FINISH SILL TRIM, SLOPED AND HEMMED AT LOW EDGE
69. 14 GA. RAKE CHANNEL ATTACHED TO ROOF PURLINS
70. AT EXTERIOR WINDOWS, PROVIDE ALUM. SUBSILL AND DAM EACH SIDE AT SILL, TYP.
71. ½" THICK X 14½" WIDE GALV. STEEL PLATE WELDED TO PURLINS. PROVIDE STRUCT. BRIDGING BETWEEN PURLINS FOR SUPPORT.
72. LIGHT FIXTURE AS SCHEDULED, REF. CEILING PLAN
73. CONCRETE LANDING FOR FUTURE ATRIUM STAIRS
74. 1–HR. RATED WALL TO UNDERSIDE OF DECK, REF. PARTITION PLAN
75. METAL STUD BRACING AS REQUIRED
76. ALUM. COLUMN WRAP/ BEAM WRAP
77. Z PURLIN FOR CEILING PANEL ATTACHMENT
78. COLONIAL STYLE HURRICANE IMPACT RESISTANT CURTAIN WALL SYSTEM
79. STEEL GIRT AT 2'–0" CENTER (REAR WALL) FOR GYP. BOARD SHEETING ATTACHMENT
80. SPANDREL BEAM (BY PEMB) FOR METAL STUD TOP TRACK ATTACHMENT. 1–HR PROTECTION (UL #X528).
81. 2 1/2" METAL STUDS @ 16" O.C.
82. POLYURETHANE EXTERIOR ORNAMENT INLAY AND CHURCH LOGO

Architectural Alliance Incorporated
350 Pine Street, Suite 720
Ellison Plaza
Beaumont, Texas 77701
TEL (409) 866-7196
FAX (409) 866-1745
J. ROSS CLARK, A.I.A.
RONALD M. JONES, A.I.A.
www.archtexas.com

REGISTERED ARCHITECT JAMES R. CLARK 8212 STATE OF TEXAS
8/16/2021

REGISTERED ARCHITECT RONALD M. JONES 13662 STATE OF TEXAS
8/16/2021

UNITED CHRISTIAN ACADEMY
First Pentecostal Church
Port Arthur, TX 77642
10619 Highway 69

ISSUED FOR
SCHEMATIC DESIGN X
DATE: 10/6/2020
DESIGN DEVELOPMENT X
DATE: 3/5/2021
BIDS & CONSTRUCTION X
DATE: 8/2/2021
REVISION:
DATE:
REVISION:
DATE:
REVISION:
DATE:

DRAWINGS SHEET TITLE
WALL SECTIONS

SHEET NUMBER
A503

20105
PROJECT NUMBER

SAVED: MICHAELM
PLOT: LEO TAN
PLOT DATE: 8/16/2021 2:00 PM
SHEET SIZE: ARCH expand D (36.00 x 24.00 inches)

OWNERSHIP OF DRAWINGS THIS DOCUMENT AND THE IDEAS AND DESIGNS INCORPORATED HEREIN, AS AN INSTRUMENT OF PROFESSIONAL SERVICES, IS THE PROPERTY OF ARCHITECTURAL ALLIANCE INCORPORATED AND IS NOT TO BE USED, IN WHOLE OR IN PART, FOR ANY OTHER PROJECT WITHOUT THE WRITTEN AUTHORIZATION OF ARCHITECTURAL ALLIANCE INCORPORATED. © COPYRIGHT 2021

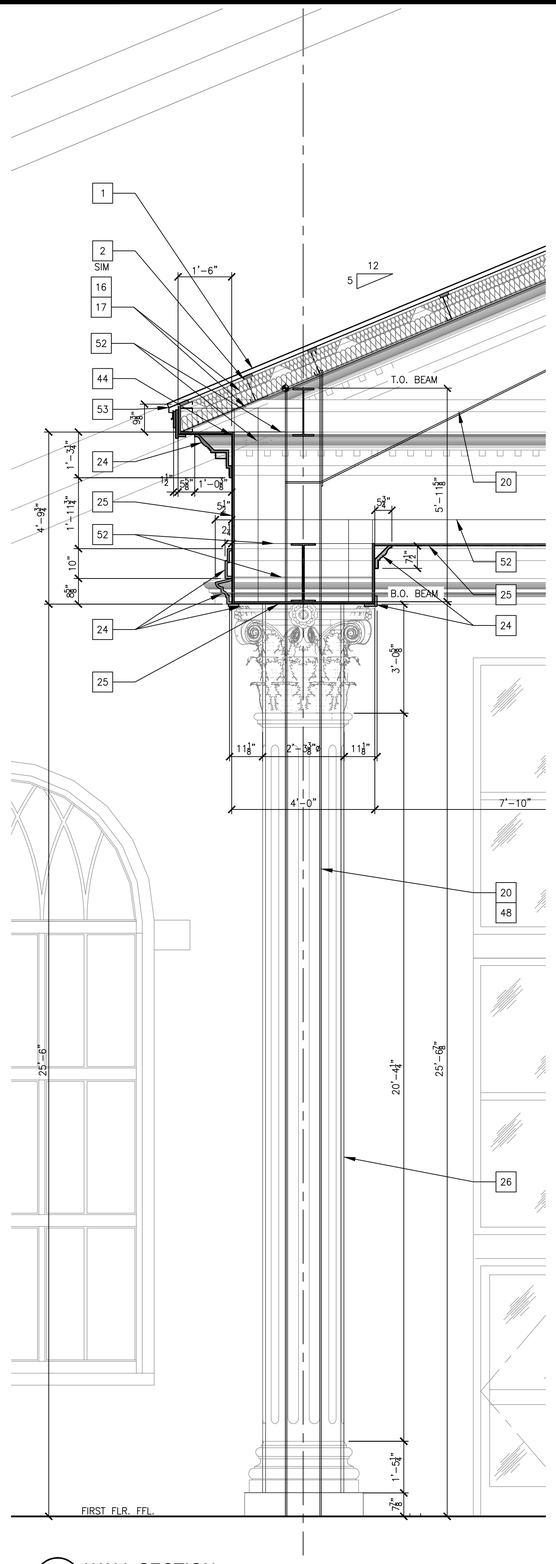

1 WALL SECTION
SCALE: 1/2"=1'-0"

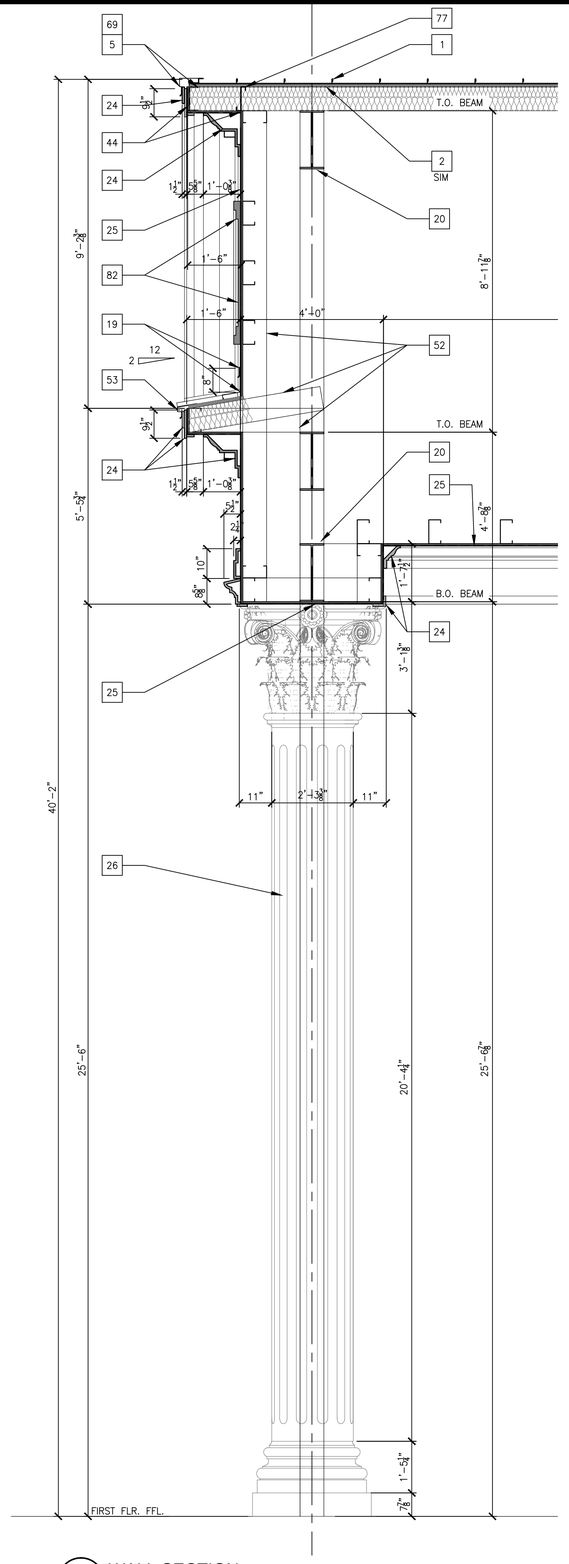

2 WALL SECTION
SCALE: 1/2"=1'-0"

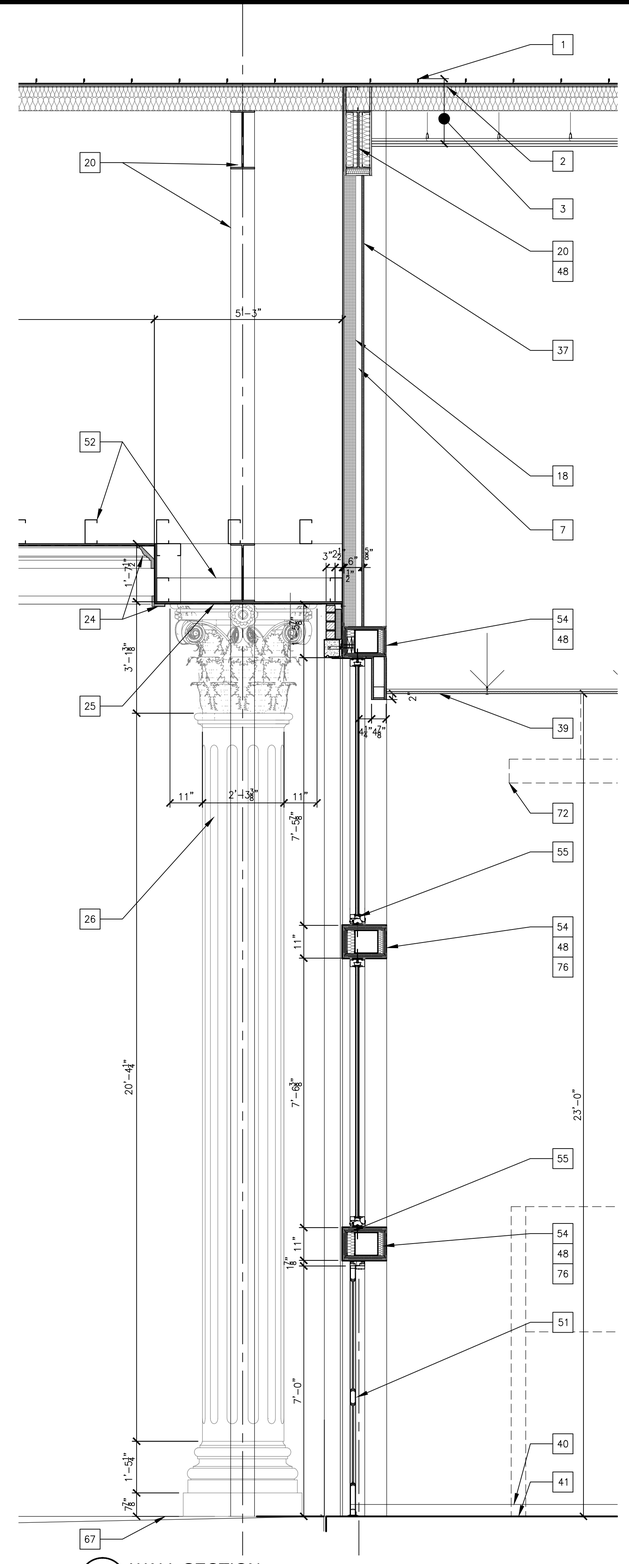

3 WALL SECTION
SCALE: 1/2"=1'-0"

WALL SECTION KEYNOTES

1. KYNAR FINISH STANDING SEAM METAL ROOF–TDI WINDSTORM RATED
2. LINER SYSTEM WITH 1X3 THERMAL SPACER BLOCKS. R–19 TOP LAYER DRAPED OVER THERMAL SPACER BLOCK LINED STEEL PURLINS. R–11 BOTTOM LAYER VINYL FACED INSTALLED IN BETWEEN PURLINS AND HELD IN PLACE BY GALV. STEEL BANDS ANCHORED TO STEEL PURLINS.
3. 1 HR. ROOF/CEILING ASSEMBLY (UL #P516). REF. CEILING PLAN.
4. STEEPLE UNIT 11 BY FIBERGLASS SPECIALTIES INC. GC TO COORDINATE HEIGHT–COMPLY WITH AIRPORT HEIGHT RESTRICTION)
5. KYNAR FINISH RAKE
6. PRE–ENGINEERED WALL HUNG METAL CANOPY WITH BRACKETS ENGINEERED FOR WINDSTORM RATING SPECIFIED AT STRUCT. DRAWINGS – KYNAR FINISH BY PRE–ENG. METAL BLDG. MANUFACTURER
7. 6" METAL STUDS, REF. STRUCTURAL FOR GAUGE AND SPACING AT DIFFERENT ZONES.
8. LIQUID APPLIED AIR, MOISTURE AND VAPOR BARRIER OVER ½" DENSGLASS SHEATHING OVER 6" METAL STUDS (REF. STRUCT. FOR GAUGE AND SPACING).
9. POLYURETHANE MOULDING AND HARDIE PANEL SMOOTH SAND FINISH –
10. GFRC CLAD CORINTHIAN COLUMN BY STROMBERG OR APPROVED EQUAL –
11. KYNAR FINISH METAL PANEL SIDING
12. KYNAR FINISH METAL PANEL CEILING OVER LIQUID APPLIED WEATHER BARRIER OVER ½" THICK DENSGLASS SHEATHING OVER ⅝" FURRING HAT CHANNEL SPACED @ 16" O.C. SCREWED TO STEEL PURLINS
13. HARDIE BOARD 1X12 FINISH TRIM
14. KYNAR FINISH EAVE TRIM, TYPE A
15. 8" STEEL GIRT, REF. PEMB DRAWINGS
16. TOP FLANGE EAVE EXTENSION WELDED TO RIGID FRAME TO SUPPORT EAVE STRUT AND PURLINS BY PEMB
17. RAFTER EXTENSION OR TOP FLANGE EXTENSION BY PEMB
18. R25 CLOSED CELL SPRAY INSULATION
19. KYNAR FINISH THRU WALL FLASHING AND COUNTERFLASHING.
20. STRUCTURAL STEEL FRAME BY PRE–ENGINEERED METAL BUILDING MANUFACTURER. REF. SPECIFICATIONS.
21. STEEL ANGLE BY PEMB
22. INSULATED HM DOOR AND FRAME, REF. SCHED.
23. STEEL SUPPORT FRAMING FOR ATTACHMENT OF APPENDAGES BY PEMB
24. POLYURETHANE COMPONENT MOULDINGS ON PEDIMENT AND ENTABLATURE – FYPON OR APPROVED EQUAL
25. HARDIE TEXTURED PANEL SMOOTH FINISH (TYPICAL)
26. FIBERGLASS CLAD CORINTHIAN COLUMN – PROVIDE WATERPROOF CLOSURE BLOCK ON TOP AND SEALANT.
27. KING SIZE FIELD BRICK WITH GALV. BRICK REINFORCING AT 16" O.C. VERTICAL AND HORIZONTAL (STAGGERED) – REF. SPECS.
28. CAST STONE WATER TABLE – REF. SPECS.
29. BURNISHED CMU BLOCKS – REF. SPECS.
30. KING SIZE BRICK QUOIN, TYP AT EXTERIOR CORNERS – REF. SPECS.
31. CAST STONE WRAP AROUND AT OPENINGS, KEYSTONE, SILL, – REF. SPECS.
32. MORTAR NET, TYP. (ABOVE FLASHING)
33. SELF ADHERED BASE FLASHING WITH TOP TERMINATION BAR
34. WEEPS AT 20" O.C.
35. KYNAR FINISH FLASHING AND THRU–WALL STEP COUNTER FLASHING, TYP.
36. PRE–ENGINEERED WALL HUNG METAL CANOPY WITH BRACKETS ENGINEERED FOR WINDSTORM RATING SPECIFIED AT STRUCT. DRAWINGS – KYNAR FINISH BY PRE–ENG. METAL BLDG. MANUFACTURER
37. 5/8" TYPE 'X' GYPSUM BOARD, TYP. U.N.O.
38. KYNAR FINISH GUTTER WITH HANGERS @ 16" O.C. AND 6"X6" DOWNSPOUT WITH STRAPS @ 3'–0" O.C. REFERENCE CIVIL FOR DOWNSPOUT ADAPTER TO STORM SEWER PIPE CONNECTION.
39. FINISHED CEILING, REF. CEILING PLAN
40. BASE AS SCHED.
41. FINISHED FLOOR, REF. SCHED.
42. ADA ALUM. THRESHOLD, VERIFY RATING AT DOOR SCHED.
43. 15 MIL VAPOR BARRIER UNDER SLAB, REF. SPECIFICATION
44. SELF ADHERING AIR, VAPOR AND MOISTURE BARRIER AT WALL AND ROOF INTERSECTION, TYPICAL UNLESS NOTED OTHERWISE.
45. CORNER BEAD, TYP. AT CORNERS
46. R–13 UNFACED BATT INSULATION
47. TEMPORARY ACCESS STAIR – WOOD CONSTRUCTION
48. 1–HR. PROTECTED PRIMARY STRUCTURAL MEMBER (UL #X528).
49. CONCRETE FILLED METAL DECK OVER STRUCT. FRAMING MEMBERS, REF. STRUCT.
50. 1–HR. FLOOR–CEILING ASSEMBLY (UL #G256)
51. DOOR PER SCHEDULE
52. 8" STRUCTURAL CEE FRAMING MEMBERS @ 24" O.C.
53. KYNAR FINISH EAVE TRIM TYPE "B" WITH CONT. CLEAT AND SEALANT.
54. 8X8 TUBE STEEL STRUCTURAL FRAME FOR HURRICANE IMPACT STOREFRONT WINDOWS SUPPORT
55. COLONIAL STYLE HURRICANE IMPACT RESISTANT STOREFRONT WINDOWS/ DOORS
56. 4X8 TUBE STEEL STRUCTURAL FRAME (BY PEMB) FOR WALL HUNG METAL CANOPY. PROVIDE TUBE ATTACHMENT TO STEEL STRUCTURE (BY PEMB).
57. EXPOSED STRUCTURE PAINT ALL SURFACES BLACK. REF. INTERIOR ELEVATIONS
58. KYNAR FINISH BASE TRIM WITH DRIP
59. NOT USED
60. CONCRETE SIDEWALK, REF. CIVIL
61. KYNAR FINISH EDGE TRIM
62. CONCRETE SLAB OVER METAL DECK, REF. PEMB DRAWINGS
63. STEEL BEAM, REF. PEMB DRAWINGS
64. STEEL ANGLE, REF. PEMB DRAWINGS
65. 3 ⅝" METAL STUD @ 16" O.C. WITH ⅝" TYPE 'X' GYPSUM BOARD ON ONE SIDE
66. 2 ½" METAL STUD @ 16" O.C. WITH ⅝" TYPE 'X' GYPSUM BOARD ON ONE SIDE
67. CONCRETE DRIVE, REF. CIVIL DRAWINGS
68. KYNAR FINISH SILL TRIM, SLOPED AND HEMMED AT LOW EDGE
69. 14 GA. RAKE CHANNEL ATTACHED TO ROOF PURLINS
70. AT EXTERIOR WINDOWS, PROVIDE ALUM. SUBSILL AND DAM EACH SIDE AT SILL, TYP.
71. ½" THICK X 14½" WIDE GALV. STEEL PLATE WELDED TO PURLINS. PROVIDE STRUCT. BRIDGING BETWEEN PURLINS FOR SUPPORT.
72. LIGHT FIXTURE AS SCHEDULED, REF. CEILING PLAN
73. CONCRETE LANDING FOR FUTURE ATRIUM STAIRS
74. 1–HR. RATED WALL TO UNDERSIDE OF DECK, REF. PARTITION PLAN
75. METAL STUD BRACING AS REQUIRED
76. ALUM. COLUMN WRAP/ BEAM WRAP
77. Z PURLIN FOR CEILING PANEL ATTACHMENT
78. COLONIAL STYLE HURRICANE IMPACT RESISTANT CURTAIN WALL SYSTEM
79. STEEL GIRT AT 2'–0" CENTER (REAR WALL) FOR GYP. BOARD SHEETING ATTACHMENT
80. SPANDREL BEAM (BY PEMB) FOR METAL STUD TOP TRACK ATTACHMENT. 1–HR PROTECTION (UL #X528).
81. 2 1/2" METAL STUDS @ 16" O.C.
82. POLYURETHANE EXTERIOR ORNAMENT INLAY AND CHURCH LOGO

Architectural Alliance Incorporated
350 Pine Street, Suite 720
Ellison Plaza
Beaumont, Texas 77701
TEL (409) 866-7196
FAX (409) 866-1745
J. ROB CLARK, A.I.A.
RONALD M. JONES, A.I.A.
www.archtexas.com

REGISTERED ARCHITECT JAMES R. CLARK 8212 STATE OF TEXAS
8/16/2021

REGISTERED ARCHITECT RONALD M. JONES 13662 STATE OF TEXAS
8/16/2021

UNITED CHRISTIAN ACADEMY
First Pentecostal Church
10619 Highway 69
Port Arthur, TX 77642

ISSUED FOR
SCHEMATIC DESIGN [X]
DATE: 10/6/2020
DESIGN DEVELOPMENT [X]
DATE: 3/5/2021
BIDS & CONSTRUCTION [X]
DATE: 8/2/2021
REVISION:
DATE:
REVISION:
DATE:
REVISION:
DATE:

DRAWINGS SHEET TITLE
WALL SECTIONS

SHEET NUMBER
A504

20105
PROJECT NUMBER

OWNERSHIP OF DRAWINGS THIS DOCUMENT AND THE IDEAS AND DESIGNS INCORPORATED HEREIN, AS AN INSTRUMENT OF PROFESSIONAL SERVICES, IS THE PROPERTY OF ARCHITECTURAL ALLIANCE INCORPORATED AND IS NOT TO BE USED, IN WHOLE OR IN PART, FOR ANY OTHER PROJECT WITHOUT THE WRITTEN AUTHORIZATION OF ARCHITECTURAL ALLIANCE INCORPORATED. © COPYRIGHT 2021

SAVED: LEOT
PLOT: LEO TAN
PLOT DATE: 8/16/2021 2:01 PM
SHEET SIZE: ARCH expand D (36.00 x 24.00 Inches)

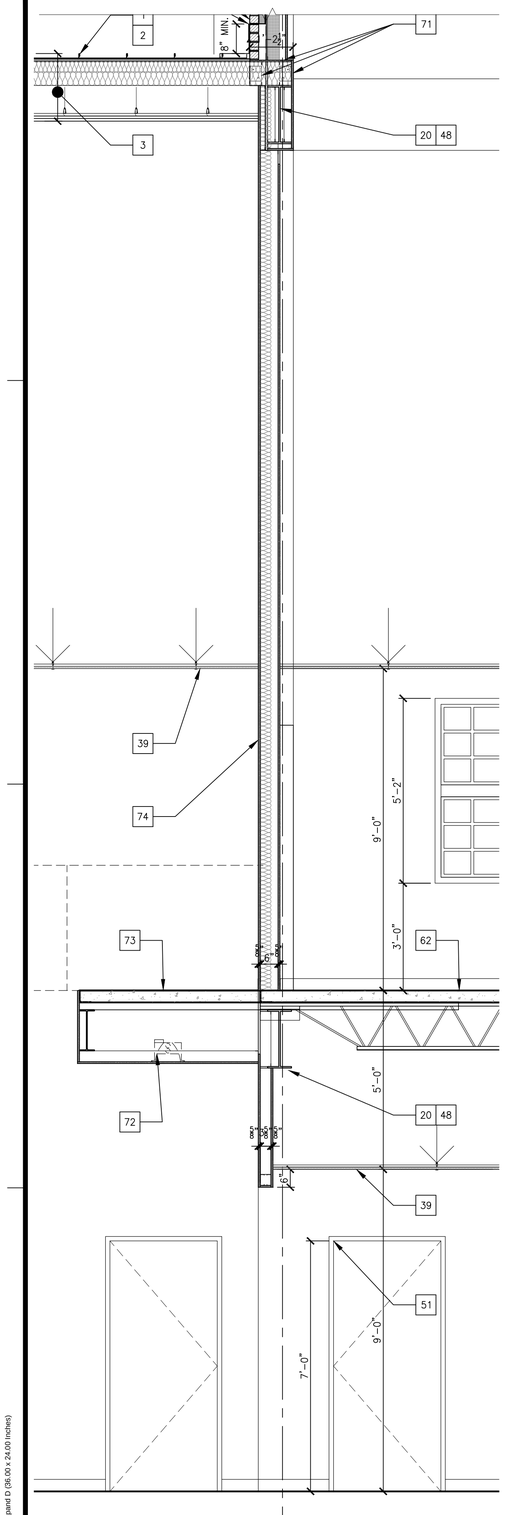

1 WALL SECTION
SCALE: 1/2"=1'-0"

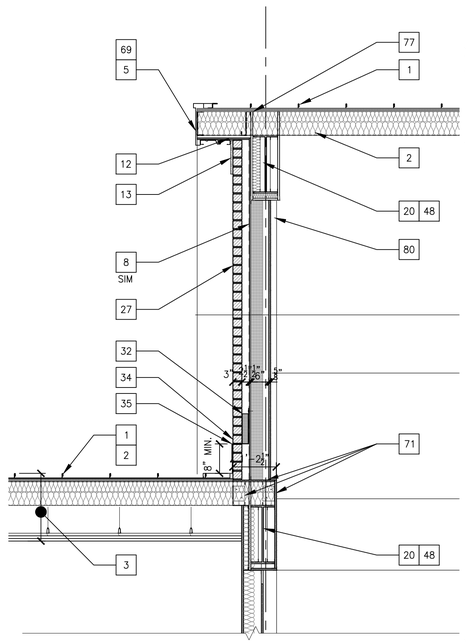

1A WALL SECTION
SCALE: 1/2"=1'-0"

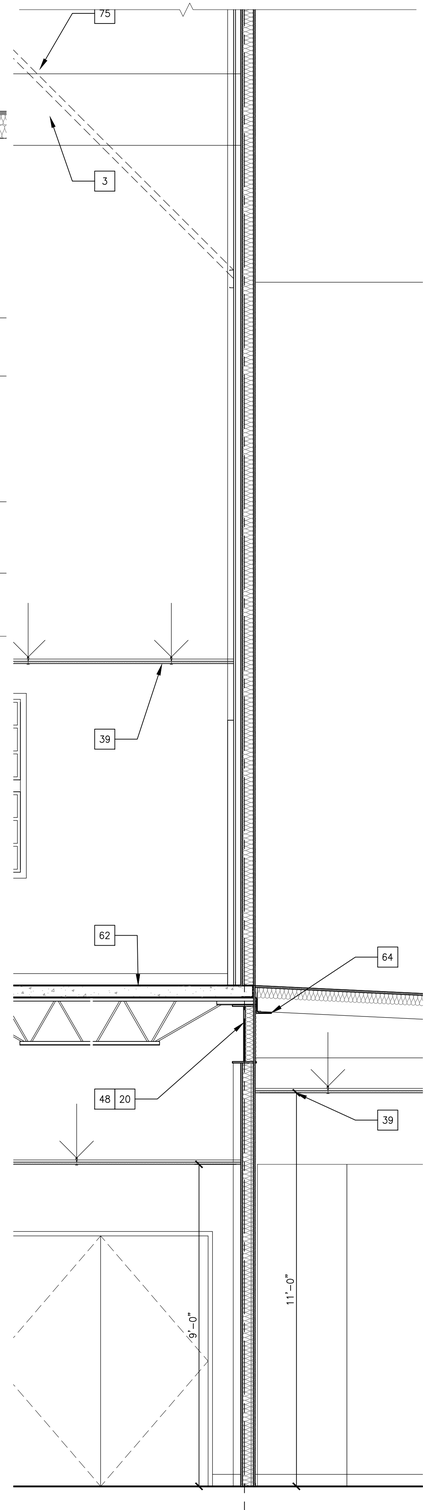

2 WALL SECTION
SCALE: 1/2"=1'-0"

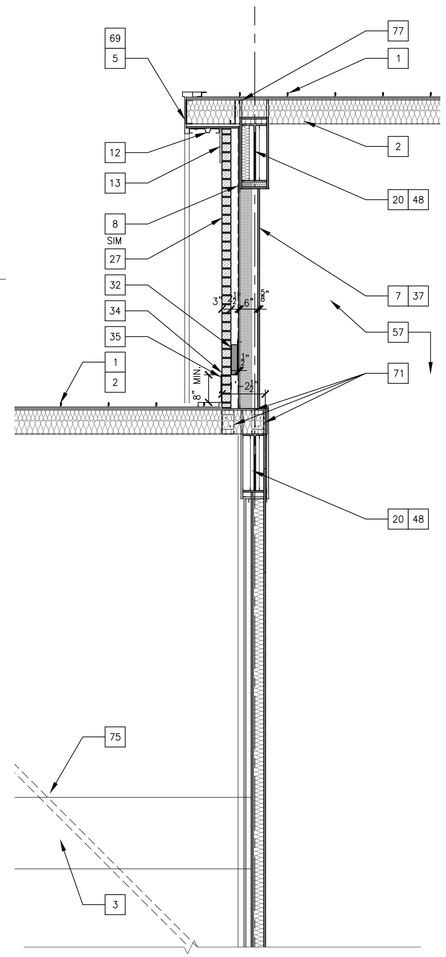

2A WALL SECTION
SCALE: 1/2"=1'-0"

WALL SECTION KEYNOTES

1. KYNAR FINISH STANDING SEAM METAL ROOF–TDI WINDSTORM RATED
2. LINER SYSTEM WITH 1X3 THERMAL SPACER BLOCKS. R–19 TOP LAYER DRAPED OVER THERMAL SPACER BLOCK LINED STEEL PURLINS. R–11 BOTTOM LAYER VINYL FACED INSTALLED IN BETWEEN PURLINS AND HELD IN PLACE BY GALV. STEEL BANDS ANCHORED TO STEEL PURLINS.
3. 1 HR. ROOF/CEILING ASSEMBLY (UL #P516). REF. CEILING PLAN.
4. STEEPLE UNIT 11 BY FIBERGLASS SPECIALTIES INC. GC TO COORDINATE HEIGHT–COMPLY WITH AIRPORT HEIGHT RESTRICTION)
5. KYNAR FINISH RAKE
6. PRE–ENGINEERED WALL HUNG METAL CANOPY WITH BRACKETS ENGINEERED FOR WINDSTORM RATING SPECIFIED AT STRUCT. DRAWINGS – KYNAR FINISH BY PRE–ENG. METAL BLDG. MANUFACTURER
7. 6" METAL STUDS, REF. STRUCTURAL FOR GAUGE AND SPACING AT DIFFERENT ZONES.
8. LIQUID APPLIED AIR, MOISTURE AND VAPOR BARRIER OVER ½" DENSGLASS SHEATHING OVER 6" METAL STUDS (REF. STRUCT. FOR GAUGE AND SPACING).
9. POLYURETHANE MOULDING AND HARDIE PANEL SMOOTH SAND FINISH –
10. GFRC CLAD CORINTHIAN COLUMN BY STROMBERG OR APPROVED EQUAL –
11. KYNAR FINISH METAL PANEL SIDING
12. KYNAR FINISH METAL PANEL CEILING OVER LIQUID APPLIED WEATHER BARRIER OVER ½" THICK DENSGLASS SHEATHING OVER ⅞" FURRING HAT CHANNEL SPACED @ 16" O.C. SCREWED TO STEEL PURLINS
13. HARDIE BOARD 1X12 FINISH TRIM
14. KYNAR FINISH EAVE TRIM, TYPE A
15. 8" STEEL GIRT, REF. PEMB DRAWINGS
16. TOP FLANGE EAVE EXTENSION WELDED TO RIGID FRAME TO SUPPORT EAVE STRUT AND PURLINS BY PEMB
17. RAFTER EXTENSION OR TOP FLANGE EXTENSION BY PEMB
18. R25 CLOSED CELL SPRAY INSULATION
19. KYNAR FINISH THRU WALL FLASHING AND COUNTERFLASHING.
20. STRUCTURAL STEEL FRAME BY PRE–ENGINEERED METAL BUILDING MANUFACTURER. REF. SPECIFICATIONS.
21. STEEL ANGLE BY PEMB
22. INSULATED HM DOOR AND FRAME, REF. SCHED.
23. STEEL SUPPORT FRAMING FOR ATTACHMENT OF APPENDAGES BY PEMB
24. POLYURETHANE COMPONENT MOULDINGS ON PEDIMENT AND ENTABLATURE – FYPON OR APPROVED EQUAL
25. HARDIE TEXTURED PANEL SMOOTH FINISH (TYPICAL)
26. FIBERGLASS CLAD CORINTHIAN COLUMN – PROVIDE WATERPROOF CLOSURE BLOCK ON TOP AND SEALANT.
27. KING SIZE FIELD BRICK WITH GALV. BRICK REINFORCING AT 16" O.C. VERTICAL AND HORIZONTAL (STAGGERED) – REF. SPECS.
28. CAST STONE WATER TABLE – REF. SPECS.
29. BURNISHED CMU BLOCKS – REF. SPECS.
30. KING SIZE BRICK QUOIN, TYP AT EXTERIOR CORNERS – REF. SPECS.
31. CAST STONE WRAP AROUND AT OPENINGS, KEYSTONE, SILL, – REF. SPECS.
32. MORTAR NET, TYP. (ABOVE FLASHING)
33. SELF ADHERED BASE FLASHING WITH TOP TERMINATION BAR
34. WEEPS AT 20" O.C.
35. KYNAR FINISH FLASHING AND THRU–WALL STEP COUNTER FLASHING, TYP.
36. PRE–ENGINEERED WALL HUNG METAL CANOPY WITH BRACKETS ENGINEERED FOR WINDSTORM RATING SPECIFIED AT STRUCT. DRAWINGS – KYNAR FINISH BY PRE–ENG. METAL BLDG. MANUFACTURER
37. 5/8" TYPE 'X' GYPSUM BOARD, TYP. U.N.O.
38. KYNAR FINISH GUTTER WITH HANGERS @ 16" O.C. AND 6"X6" DOWNSPOUT WITH STRAPS @ 3'–0" O.C. REFERENCE CIVIL FOR DOWNSPOUT ADAPTER TO STORM SEWER PIPE CONNECTION.
39. FINISHED CEILING, REF. CEILING PLAN
40. BASE AS SCHED.
41. FINISHED FLOOR, REF. SCHED.
42. ADA ALUM. THRESHOLD, VERIFY RATING AT DOOR SCHED.
43. 15 MIL VAPOR BARRIER UNDER SLAB, REF. SPECIFICATION
44. SELF ADHERING AIR, VAPOR AND MOISTURE BARRIER AT WALL AND ROOF INTERSECTION, TYPICAL UNLESS NOTED OTHERWISE.
45. CORNER BEAD, TYP. AT CORNERS
46. R–13 UNFACED BATT INSULATION
47. TEMPORARY ACCESS STAIR – WOOD CONSTRUCTION
48. 1–HR. PROTECTED PRIMARY STRUCTURAL MEMBER (UL #X528).
49. CONCRETE FILLED METAL DECK OVER STRUCT. FRAMING MEMBERS, REF. STRUCT.
50. 1–HR. FLOOR–CEILING ASSEMBLY (UL #G256)
51. DOOR PER SCHEDULE
52. 8" STRUCTURAL CEE FRAMING MEMBERS @ 24" O.C.
53. KYNAR FINISH EAVE TRIM TYPE "B" WITH CONT. CLEAT AND SEALANT.
54. 8X8 TUBE STEEL STRUCTURAL FRAME FOR HURRICANE IMPACT STOREFRONT WINDOWS SUPPORT
55. COLONIAL STYLE HURRICANE IMPACT RESISTANT STOREFRONT WINDOWS/ DOORS
56. 4X8 TUBE STEEL STRUCTURAL FRAME (BY PEMB) FOR WALL HUNG METAL CANOPY. PROVIDE TUBE ATTACHMENT TO STEEL STRUCTURE (BY PEMB).
57. EXPOSED STRUCTURE PAINT ALL SURFACES BLACK. REF. INTERIOR ELEVATIONS
58. KYNAR FINISH BASE TRIM WITH DRIP
59. NOT USED
60. CONCRETE SIDEWALK, REF. CIVIL
61. KYNAR FINISH EDGE TRIM
62. CONCRETE SLAB OVER METAL DECK, REF. PEMB DRAWINGS
63. STEEL BEAM, REF. PEMB DRAWINGS
64. STEEL ANGLE, REF. PEMB DRAWINGS
65. 3 ⅝" METAL STUD @ 16" O.C. WITH ⅝" TYPE 'X' GYPSUM BOARD ON ONE SIDE
66. 2 ½" METAL STUD @ 16" O.C. WITH ⅝" TYPE 'X' GYPSUM BOARD ON ONE SIDE
67. CONCRETE DRIVE, REF. CIVIL DRAWINGS
68. KYNAR FINISH SILL TRIM, SLOPED AND HEMMED AT LOW EDGE
69. 14 GA. RAKE CHANNEL ATTACHED TO ROOF PURLINS
70. AT EXTERIOR WINDOWS, PROVIDE ALUM. SUBSILL AND DAM EACH SIDE AT SILL, TYP.
71. ½" THICK X 14½" WIDE GALV. STEEL PLATE WELDED TO PURLINS. PROVIDE STRUCT. BRIDGING BETWEEN PURLINS FOR SUPPORT.
72. LIGHT FIXTURE AS SCHEDULED, REF. CEILING PLAN
73. CONCRETE LANDING FOR FUTURE ATRIUM STAIRS
74. 1–HR. RATED WALL TO UNDERSIDE OF DECK, REF. PARTITION PLAN
75. METAL STUD BRACING AS REQUIRED
76. ALUM. COLUMN WRAP/ BEAM WRAP
77. Z PURLIN FOR CEILING PANEL ATTACHMENT
78. COLONIAL STYLE HURRICANE IMPACT RESISTANT CURTAIN WALL SYSTEM
79. STEEL GIRT AT 2'–0" CENTER (REAR WALL) FOR GYP. BOARD SHEETING ATTACHMENT
80. SPANDREL BEAM (BY PEMB) FOR METAL STUD TOP TRACK ATTACHMENT. 1–HR PROTECTION (UL #X528).
81. 2 1/2" METAL STUDS @ 16" O.C.
82. POLYURETHANE EXTERIOR ORNAMENT INLAY AND CHURCH LOGO

Architectural Alliance Incorporated
350 Pine Street, Suite 720
Ellison Plaza
Beaumont, Texas 77701
TEL (409) 866-7196
FAX (409) 866-1745
J. ROSS CLARK, A.I.A.
RONALD M. JONES, A.I.A.
www.archtexstal.com

REGISTERED ARCHITECT JAMES R. CLARK 8212 STATE OF TEXAS
8/16/2021

REGISTERED ARCHITECT RONALD M. JONES 13662 STATE OF TEXAS
8/16/2021

UNITED CHRISTIAN ACADEMY
First Pentecostal Church
10610 Highway 69
Port Arthur, TX 77642

ISSUED FOR
SCHEMATIC DESIGN [X]
DATE: 10/6/2020
DESIGN DEVELOPMENT [X]
DATE: 3/5/2021
BIDS & CONSTRUCTION [X]
DATE: 8/2/2021
REVISION:
DATE:
REVISION:
DATE:
REVISION:
DATE:

DRAWINGS SHEET TITLE
WALL SECTIONS

SHEET NUMBER
A505

20105
PROJECT NUMBER

OWNERSHIP OF DRAWINGS THIS DOCUMENT AND THE IDEAS AND DESIGNS INCORPORATED HEREIN, AS AN INSTRUMENT OF PROFESSIONAL SERVICES, IS THE PROPERTY OF ARCHITECTURAL ALLIANCE INCORPORATED AND IS NOT TO BE USED, IN WHOLE OR IN PART, FOR ANY OTHER PROJECT WITHOUT THE WRITTEN AUTHORIZATION OF ARCHITECTURAL ALLIANCE INCORPORATED. © COPYRIGHT 2021

SAVED: WENDY'S
PLOT: LEO TAN
PLOT DATE: 8/16/2021 2:02 PM
SHEET SIZE: ARCH expand D (36.00 x 24.00 inches)

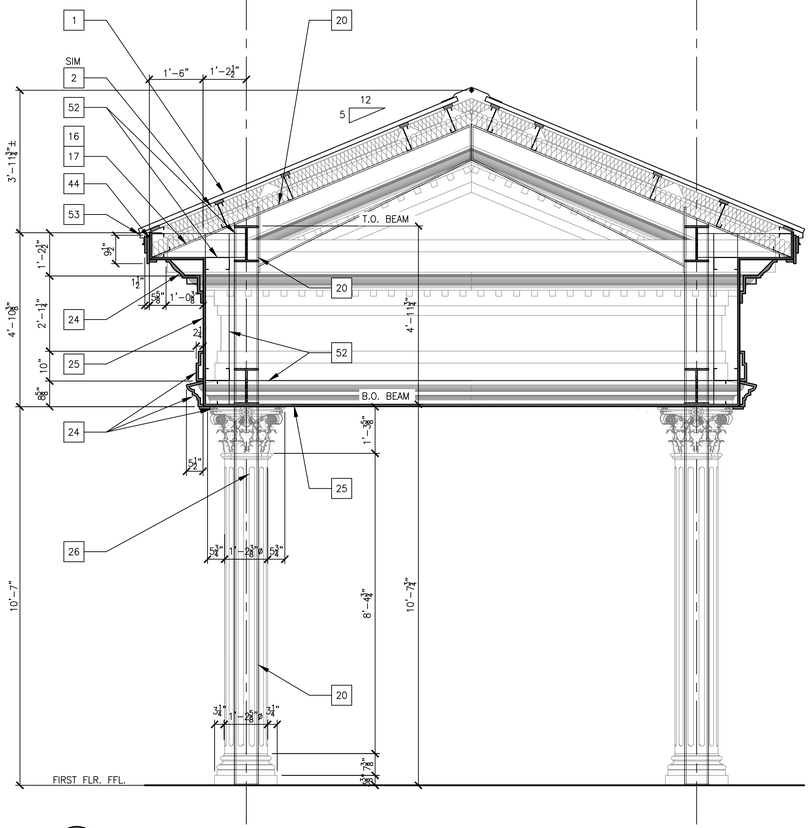

1 WALL SECTION
SCALE: 1/2"=1'-0"

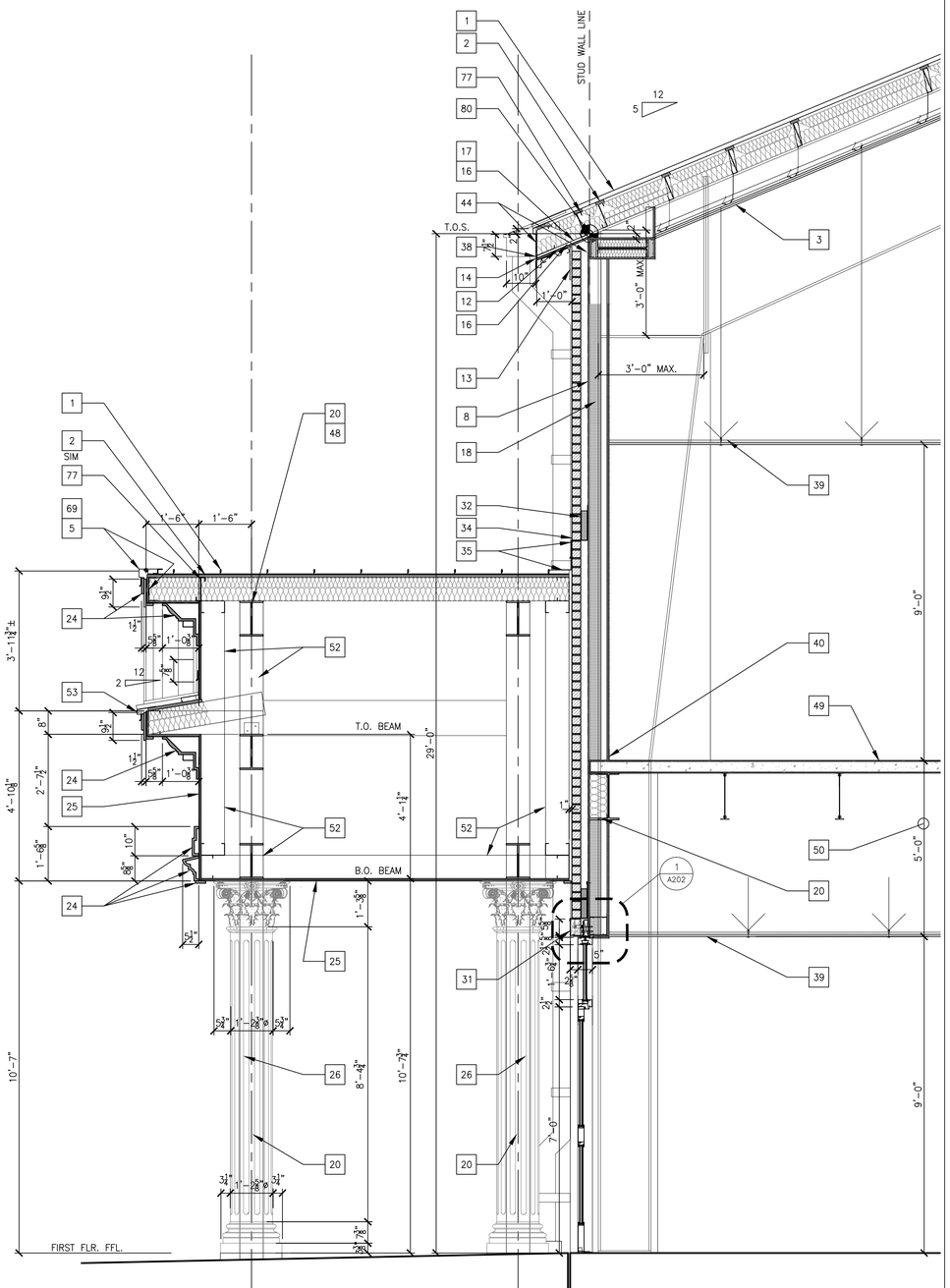

2 WALL SECTION
SCALE: 1/2"=1'-0"

WALL SECTION KEYNOTES

1. KYNAR FINISH STANDING SEAM METAL ROOF–TDI WINDSTORM RATED
2. LINER SYSTEM WITH 1X3 THERMAL SPACER BLOCKS. R–19 TOP LAYER DRAPED OVER THERMAL SPACER BLOCK LINED STEEL PURLINS. R–11 BOTTOM LAYER VINYL FACED INSTALLED IN BETWEEN PURLINS AND HELD IN PLACE BY GALV. STEEL BANDS ANCHORED TO STEEL PURLINS.
3. 1 HR. ROOF/CEILING ASSEMBLY (UL #P516). REF. CEILING PLAN.
4. STEEPLE UNIT 11 BY FIBERGLASS SPECIALTIES INC. GC TO COORDINATE HEIGHT–COMPLY WITH AIRPORT HEIGHT RESTRICTION)
5. KYNAR FINISH RAKE
6. PRE–ENGINEERED WALL HUNG METAL CANOPY WITH BRACKETS ENGINEERED FOR WINDSTORM RATING SPECIFIED AT STRUCT. DRAWINGS – KYNAR FINISH BY PRE–ENG. METAL BLDG. MANUFACTURER
7. 6" METAL STUDS, REF. STRUCTURAL FOR GAUGE AND SPACING AT DIFFERENT ZONES.
8. LIQUID APPLIED AIR, MOISTURE AND VAPOR BARRIER OVER ½" DENSGLASS SHEATHING OVER 6" METAL STUDS (REF. STRUCT. FOR GAUGE AND SPACING).
9. POLYURETHANE MOULDING AND HARDIE PANEL SMOOTH SAND FINISH –
10. GFRC CLAD CORINTHIAN COLUMN BY STROMBERG OR APPROVED EQUAL –
11. KYNAR FINISH METAL PANEL SIDING
12. KYNAR FINISH METAL PANEL CEILING OVER LIQUID APPLIED WEATHER BARRIER OVER ½" THICK DENSGLASS SHEATHING OVER ⅞" FURRING HAT CHANNEL SPACED @ 16" O.C. SCREWED TO STEEL PURLINS
13. HARDIE BOARD 1X12 FINISH TRIM
14. KYNAR FINISH EAVE TRIM, TYPE A
15. 8" STEEL GIRT, REF. PEMB DRAWINGS
16. TOP FLANGE EAVE EXTENSION WELDED TO RIGID FRAME TO SUPPORT EAVE STRUT AND PURLINS BY PEMB
17. RAFTER EXTENSION OR TOP FLANGE EXTENSION BY PEMB
18. R25 CLOSED CELL SPRAY INSULATION
19. KYNAR FINISH THRU WALL FLASHING AND COUNTERFLASHING.
20. STRUCTURAL STEEL FRAME BY PRE–ENGINEERED METAL BUILDING MANUFACTURER. REF. SPECIFICATIONS.
21. STEEL ANGLE BY PEMB
22. INSULATED HM DOOR AND FRAME, REF. SCHED.
23. STEEL SUPPORT FRAMING FOR ATTACHMENT OF APPENDAGES BY PEMB
24. POLYURETHANE COMPONENT MOULDINGS ON PEDIMENT AND ENTABLATURE – FYPON OR APPROVED EQUAL
25. HARDIE TEXTURED PANEL SMOOTH FINISH (TYPICAL)
26. FIBERGLASS CLAD CORINTHIAN COLUMN – PROVIDE WATERPROOF CLOSURE BLOCK ON TOP AND SEALANT.
27. KING SIZE FIELD BRICK WITH GALV. BRICK REINFORCING AT 16" O.C. VERTICAL AND HORIZONTAL (STAGGERED) – REF. SPECS.
28. CAST STONE WATER TABLE – REF. SPECS.
29. BURNISHED CMU BLOCKS – REF. SPECS.
30. KING SIZE BRICK QUOIN, TYP AT EXTERIOR CORNERS – REF. SPECS.
31. CAST STONE WRAP AROUND AT OPENINGS, KEYSTONE, SILL, – REF. SPECS.
32. MORTAR NET, TYP. (ABOVE FLASHING)
33. SELF ADHERED BASE FLASHING WITH TOP TERMINATION BAR
34. WEEPS AT 20" O.C.
35. KYNAR FINISH FLASHING AND THRU–WALL STEP COUNTER FLASHING, TYP.
36. PRE–ENGINEERED WALL HUNG METAL CANOPY WITH BRACKETS ENGINEERED FOR WINDSTORM RATING SPECIFIED AT STRUCT. DRAWINGS – KYNAR FINISH BY PRE–ENG. METAL BLDG. MANUFACTURER
37. 5/8" TYPE 'X' GYPSUM BOARD, TYP. U.N.O.
38. KYNAR FINISH GUTTER WITH HANGERS @ 16" O.C. AND 6"X6" DOWNSPOUT WITH STRAPS @ 3'–0" O.C. REFERENCE CIVIL FOR DOWNSPOUT ADAPTER TO STORM SEWER PIPE CONNECTION.
39. FINISHED CEILING, REF. CEILING PLAN
40. BASE AS SCHED.
41. FINISHED FLOOR, REF. SCHED.
42. ADA ALUM. THRESHOLD, VERIFY RATING AT DOOR SCHED.
43. 15 MIL VAPOR BARRIER UNDER SLAB, REF. SPECIFICATION
44. SELF ADHERING AIR, VAPOR AND MOISTURE BARRIER AT WALL AND ROOF INTERSECTION, TYPICAL UNLESS NOTED OTHERWISE.
45. CORNER BEAD, TYP. AT CORNERS
46. R–13 UNFACED BATT INSULATION
47. TEMPORARY ACCESS STAIR – WOOD CONSTRUCTION
48. 1–HR. PROTECTED PRIMARY STRUCTURAL MEMBER (UL #X528).
49. CONCRETE FILLED METAL DECK OVER STRUCT. FRAMING MEMBERS, REF. STRUCT.
50. 1–HR. FLOOR–CEILING ASSEMBLY (UL #G256)
51. DOOR PER SCHEDULE
52. 8" STRUCTURAL CEE FRAMING MEMBERS @ 24" O.C.
53. KYNAR FINISH EAVE TRIM TYPE "B" WITH CONT. CLEAT AND SEALANT.
54. 8X8 TUBE STEEL STRUCTURAL FRAME FOR HURRICANE IMPACT STOREFRONT WINDOWS SUPPORT
55. COLONIAL STYLE HURRICANE IMPACT RESISTANT STOREFRONT WINDOWS/ DOORS
56. 4X8 TUBE STEEL STRUCTURAL FRAME (BY PEMB) FOR WALL HUNG METAL CANOPY. PROVIDE TUBE ATTACHMENT TO STEEL STRUCTURE (BY PEMB).
57. EXPOSED STRUCTURE PAINT ALL SURFACES BLACK. REF. INTERIOR ELEVATIONS
58. KYNAR FINISH BASE TRIM WITH DRIP
59. NOT USED
60. CONCRETE SIDEWALK, REF. CIVIL
61. KYNAR FINISH EDGE TRIM
62. CONCRETE SLAB OVER METAL DECK, REF. PEMB DRAWINGS
63. STEEL BEAM, REF. PEMB DRAWINGS
64. STEEL ANGLE, REF. PEMB DRAWINGS
65. 3 ⅝" METAL STUD @ 16" O.C. WITH ⅝" TYPE 'X' GYPSUM BOARD ON ONE SIDE
66. 2 ½" METAL STUD @ 16" O.C. WITH ⅝" TYPE 'X' GYPSUM BOARD ON ONE SIDE
67. CONCRETE DRIVE, REF. CIVIL DRAWINGS
68. KYNAR FINISH SILL TRIM, SLOPED AND HEMMED AT LOW EDGE
69. 14 GA. RAKE CHANNEL ATTACHED TO ROOF PURLINS
70. AT EXTERIOR WINDOWS, PROVIDE ALUM. SUBSILL AND DAM EACH SIDE AT SILL, TYP.
71. ¼" THICK X 14½" WIDE GALV. STEEL PLATE WELDED TO PURLINS. PROVIDE STRUCT. BRIDGING BETWEEN PURLINS FOR SUPPORT.
72. LIGHT FIXTURE AS SCHEDULED, REF. CEILING PLAN
73. CONCRETE LANDING FOR FUTURE ATRIUM STAIRS
74. 1–HR. RATED WALL TO UNDERSIDE OF DECK, REF. PARTITION PLAN
75. METAL STUD BRACING AS REQUIRED
76. ALUM. COLUMN WRAP/ BEAM WRAP
77. Z PURLIN FOR CEILING PANEL ATTACHMENT
78. COLONIAL STYLE HURRICANE IMPACT RESISTANT CURTAIN WALL SYSTEM
79. STEEL GIRT AT 2'–0" CENTER (REAR WALL) FOR GYP. BOARD SHEETING ATTACHMENT
80. SPANDREL BEAM (BY PEMB) FOR METAL STUD TOP TRACK ATTACHMENT. 1–HR PROTECTION (UL #X528).
81. 2 1/2" METAL STUDS @ 16" O.C.
82. POLYURETHANE EXTERIOR ORNAMENT INLAY AND CHURCH LOGO

Architectural Alliance Incorporated
350 Pine Street, Suite 720
Ellison Plaza
Beaumont, Texas 77701
TEL (409) 866-7196
FAX (409) 866-1745
J. ROSS CLARK, A.I.A.
RONALD M. JONES, A.I.A.
www.archtexas.com

REGISTERED ARCHITECT
JAMES R. CLARK
8212
STATE OF TEXAS
8/16/2021

REGISTERED ARCHITECT
RONALD M. JONES
13662
STATE OF TEXAS
8/16/2021

UNITED CHRISTIAN ACADEMY
First Pentecostal Church
10619 Highway 69
Port Arthur, TX 77642

ISSUED FOR
SCHEMATIC DESIGN X
DATE: 10/6/2020
DESIGN DEVELOPMENT X
DATE: 3/5/2021
BIDS & CONSTRUCTION X
DATE: 8/2/2021
REVISION:
DATE:
REVISION:
DATE:
REVISION:
DATE:

DRAWINGS SHEET TITLE
WALL SECTIONS

SHEET NUMBER
A506

20105
PROJECT NUMBER

OWNERSHIP OF DRAWINGS THIS DOCUMENT AND THE IDEAS AND DESIGNS INCORPORATED HEREIN, AS AN INSTRUMENT OF PROFESSIONAL SERVICES, IS THE PROPERTY OF ARCHITECTURAL ALLIANCE INCORPORATED AND IS NOT TO BE USED, IN WHOLE OR IN PART, FOR ANY OTHER PROJECT WITHOUT THE WRITTEN AUTHORIZATION OF ARCHITECTURAL ALLIANCE INCORPORATED. © COPYRIGHT 2021

SAVED: WENDYS
PLOT: LEO TAN
PLOT DATE: 8/16/2021 2:02 PM
SHEET SIZE: ARCH expand D (36.00 x 24.00 Inches)

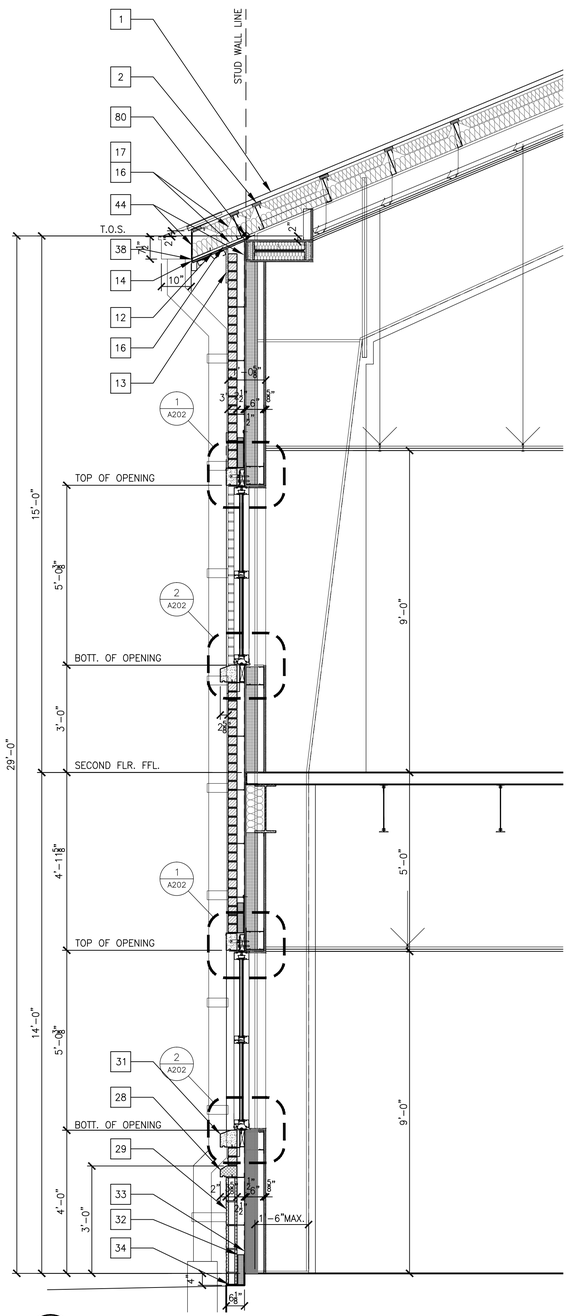

1 WALL SECTION
SCALE: 1/2"=1'-0"

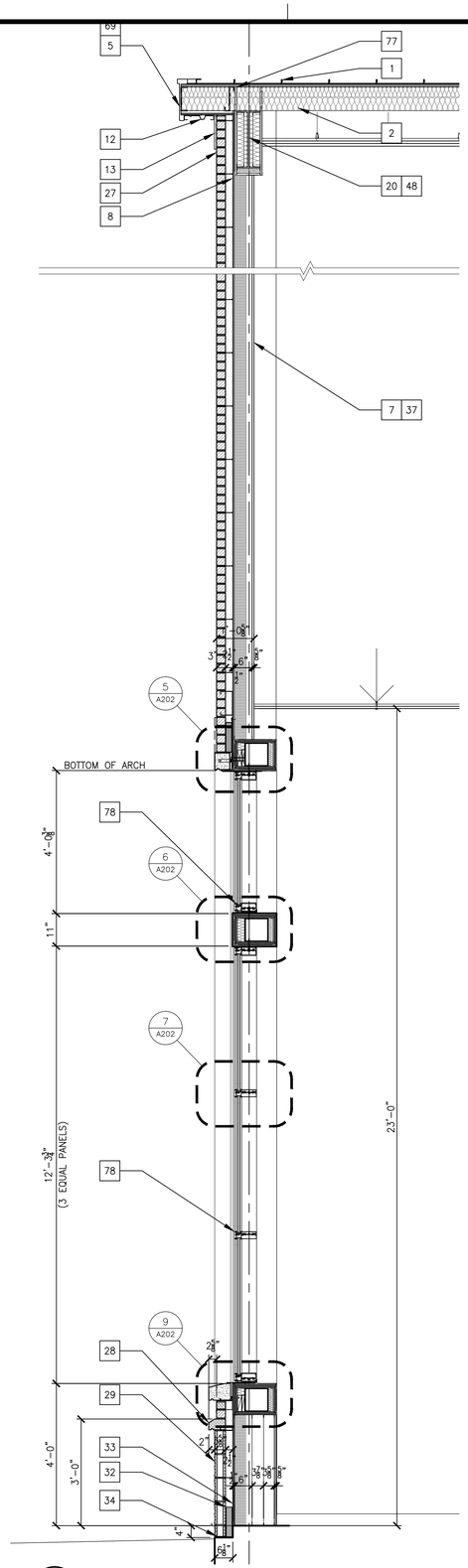

2 WALL SECTION
SCALE: 1/2"=1'-0"

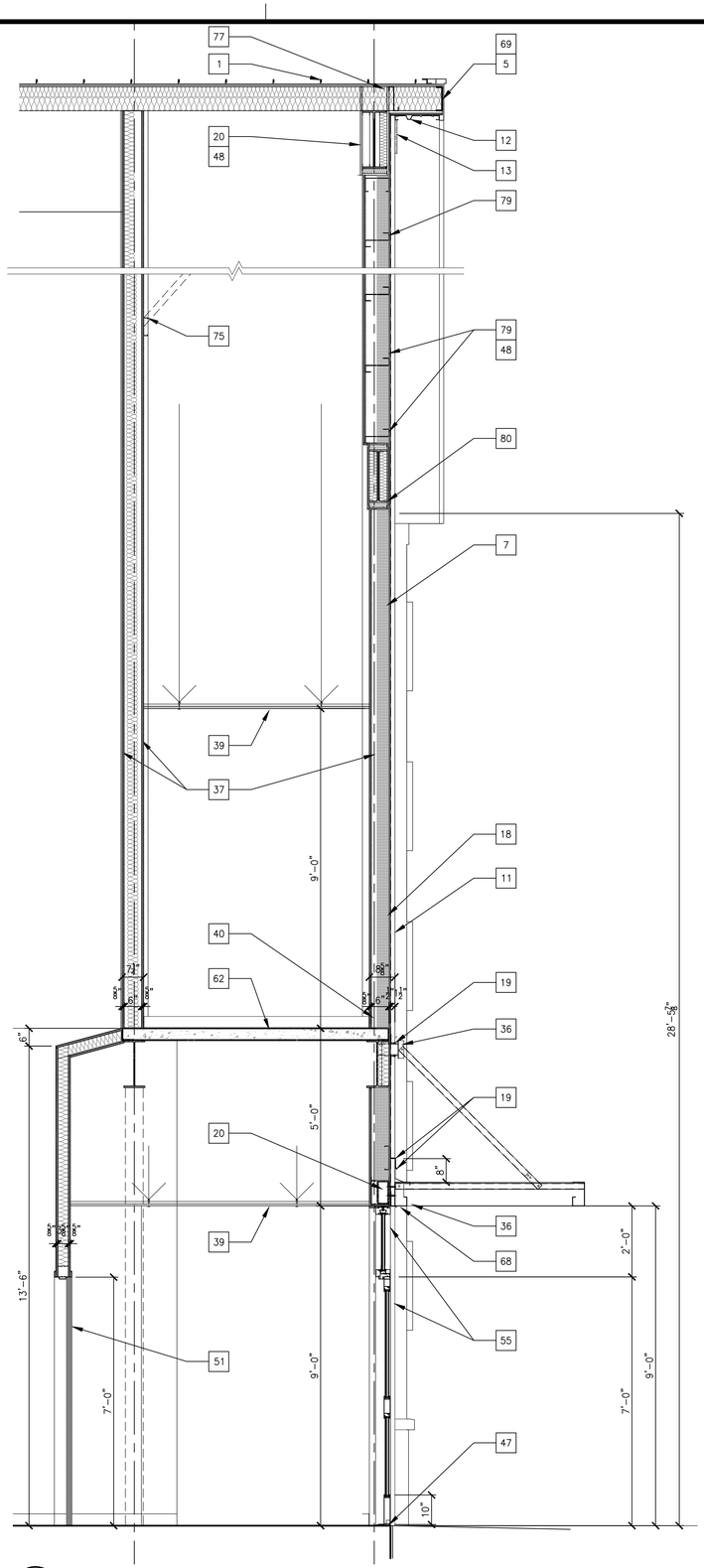

3 WALL SECTION
SCALE: 1/2"=1'-0"

WALL SECTION KEYNOTES

1. KYNAR FINISH STANDING SEAM METAL ROOF–TDI WINDSTORM RATED
2. LINER SYSTEM WITH 1X3 THERMAL SPACER BLOCKS. R–19 TOP LAYER DRAPED OVER THERMAL SPACER BLOCK LINED STEEL PURLINS. R–11 BOTTOM LAYER VINYL FACED INSTALLED IN BETWEEN PURLINS AND HELD IN PLACE BY GALV. STEEL BANDS ANCHORED TO STEEL PURLINS.
3. 1 HR. ROOF/CEILING ASSEMBLY (UL #P516). REF. CEILING PLAN.
4. STEEPLE UNIT 11 BY FIBERGLASS SPECIALTIES INC. GC TO COORDINATE HEIGHT–COMPLY WITH AIRPORT HEIGHT RESTRICTION)
5. KYNAR FINISH RAKE
6. PRE–ENGINEERED WALL HUNG METAL CANOPY WITH BRACKETS ENGINEERED FOR WINDSTORM RATING SPECIFIED AT STRUCT. DRAWINGS – KYNAR FINISH BY PRE–ENG. METAL BLDG. MANUFACTURER
7. 6" METAL STUDS, REF. STRUCTURAL FOR GAUGE AND SPACING AT DIFFERENT ZONES.
8. LIQUID APPLIED AIR, MOISTURE AND VAPOR BARRIER OVER ½" DENSGLASS SHEATHING OVER 6" METAL STUDS (REF. STRUCT. FOR GAUGE AND SPACING).
9. POLYURETHANE MOULDING AND HARDIE PANEL SMOOTH SAND FINISH –
10. GFRC CLAD CORINTHIAN COLUMN BY STROMBERG OR APPROVED EQUAL –
11. KYNAR FINISH METAL PANEL SIDING
12. KYNAR FINISH METAL PANEL CEILING OVER LIQUID APPLIED WEATHER BARRIER OVER ½" THICK DENSGLASS SHEATHING OVER ⅝" FURRING HAT CHANNEL SPACED @ 16" O.C. SCREWED TO STEEL PURLINS
13. HARDIE BOARD 1X12 FINISH TRIM
14. KYNAR FINISH EAVE TRIM, TYPE A
15. 8" STEEL GIRT, REF. PEMB DRAWINGS
16. TOP FLANGE EAVE EXTENSION WELDED TO RIGID FRAME TO SUPPORT EAVE STRUT AND PURLINS BY PEMB
17. RAFTER EXTENSION OR TOP FLANGE EXTENSION BY PEMB
18. R25 CLOSED CELL SPRAY INSULATION
19. KYNAR FINISH THRU WALL FLASHING AND COUNTERFLASHING.
20. STRUCTURAL STEEL FRAME BY PRE–ENGINEERED METAL BUILDING MANUFACTURER. REF. SPECIFICATIONS.
21. STEEL ANGLE BY PEMB
22. INSULATED HM DOOR AND FRAME, REF. SCHED.
23. STEEL SUPPORT FRAMING FOR ATTACHMENT OF APPENDAGES BY PEMB
24. POLYURETHANE COMPONENT MOULDINGS ON PEDIMENT AND ENTABLATURE – FYPON OR APPROVED EQUAL
25. HARDIE TEXTURED PANEL SMOOTH FINISH (TYPICAL)
26. FIBERGLASS CLAD CORINTHIAN COLUMN – PROVIDE WATERPROOF CLOSURE BLOCK ON TOP AND SEALANT.
27. KING SIZE FIELD BRICK WITH GALV. BRICK REINFORCING AT 16" O.C. VERTICAL AND HORIZONTAL (STAGGERED) – REF. SPECS.
28. CAST STONE WATER TABLE – REF. SPECS.
29. BURNISHED CMU BLOCKS – REF. SPECS.
30. KING SIZE BRICK QUOIN, TYP AT EXTERIOR CORNERS – REF. SPECS.
31. CAST STONE WRAP AROUND AT OPENINGS, KEYSTONE, SILL, – REF. SPECS.
32. MORTAR NET, TYP. (ABOVE FLASHING)
33. SELF ADHERED BASE FLASHING WITH TOP TERMINATION BAR
34. WEEPS AT 20" O.C.
35. KYNAR FINISH FLASHING AND THRU–WALL STEP COUNTER FLASHING, TYP.
36. PRE–ENGINEERED WALL HUNG METAL CANOPY WITH BRACKETS ENGINEERED FOR WINDSTORM RATING SPECIFIED AT STRUCT. DRAWINGS – KYNAR FINISH BY PRE–ENG. METAL BLDG. MANUFACTURER
37. 5/8" TYPE 'X' GYPSUM BOARD, TYP. U.N.O.
38. KYNAR FINISH GUTTER WITH HANGERS @ 16" O.C. AND 6"X6" DOWNSPOUT WITH STRAPS @ 3'–0" O.C. REFERENCE CIVIL FOR DOWNSPOUT ADAPTER TO STORM SEWER PIPE CONNECTION.
39. FINISHED CEILING, REF. CEILING PLAN
40. BASE AS SCHED.
41. FINISHED FLOOR, REF. SCHED.
42. ADA ALUM. THRESHOLD, VERIFY RATING AT DOOR SCHED.
43. 15 MIL VAPOR BARRIER UNDER SLAB, REF. SPECIFICATION
44. SELF ADHERING AIR, VAPOR AND MOISTURE BARRIER AT WALL AND ROOF INTERSECTION, TYPICAL UNLESS NOTED OTHERWISE.
45. CORNER BEAD, TYP. AT CORNERS
46. R–13 UNFACED BATT INSULATION
47. TEMPORARY ACCESS STAIR – WOOD CONSTRUCTION
48. 1–HR. PROTECTED PRIMARY STRUCTURAL MEMBER (UL #X528).
49. CONCRETE FILLED METAL DECK OVER STRUCT. FRAMING MEMBERS, REF. STRUCT.
50. 1–HR. FLOOR–CEILING ASSEMBLY (UL #G256)
51. DOOR PER SCHEDULE
52. 8" STRUCTURAL CEE FRAMING MEMBERS @ 24" O.C.
53. KYNAR FINISH EAVE TRIM TYPE "B" WITH CONT. CLEAT AND SEALANT.
54. 8X8 TUBE STEEL STRUCTURAL FRAME FOR HURRICANE IMPACT STOREFRONT WINDOWS SUPPORT
55. COLONIAL STYLE HURRICANE IMPACT RESISTANT STOREFRONT WINDOWS/ DOORS
56. 4X8 TUBE STEEL STRUCTURAL FRAME (BY PEMB) FOR WALL HUNG METAL CANOPY. PROVIDE TUBE ATTACHMENT TO STEEL STRUCTURE (BY PEMB).
57. EXPOSED STRUCTURE PAINT ALL SURFACES BLACK. REF. INTERIOR ELEVATIONS
58. KYNAR FINISH BASE TRIM WITH DRIP
59. NOT USED
60. CONCRETE SIDEWALK, REF. CIVIL
61. KYNAR FINISH EDGE TRIM
62. CONCRETE SLAB OVER METAL DECK, REF. PEMB DRAWINGS
63. STEEL BEAM, REF. PEMB DRAWINGS
64. STEEL ANGLE, REF. PEMB DRAWINGS
65. 3 ⅝" METAL STUD @ 16" O.C. WITH ⅝" TYPE 'X' GYPSUM BOARD ON ONE SIDE
66. 2 ½" METAL STUD @ 16" O.C. WITH ⅝" TYPE 'X' GYPSUM BOARD ON ONE SIDE
67. CONCRETE DRIVE, REF. CIVIL DRAWINGS
68. KYNAR FINISH SILL TRIM, SLOPED AND HEMMED AT LOW EDGE
69. 14 GA. RAKE CHANNEL ATTACHED TO ROOF PURLINS
70. AT EXTERIOR WINDOWS, PROVIDE ALUM. SUBSILL AND DAM EACH SIDE AT SILL, TYP.
71. ¼" THICK X 14½" WIDE GALV. STEEL PLATE WELDED TO PURLINS. PROVIDE STRUCT. BRIDGING BETWEEN PURLINS FOR SUPPORT.
72. LIGHT FIXTURE AS SCHEDULED, REF. CEILING PLAN
73. CONCRETE LANDING FOR FUTURE ATRIUM STAIRS
74. 1–HR. RATED WALL TO UNDERSIDE OF DECK, REF. PARTITION PLAN
75. METAL STUD BRACING AS REQUIRED
76. ALUM. COLUMN WRAP/ BEAM WRAP
77. Z PURLIN FOR CEILING PANEL ATTACHMENT
78. COLONIAL STYLE HURRICANE IMPACT RESISTANT CURTAIN WALL SYSTEM
79. STEEL GIRT AT 2'–0" CENTER (REAR WALL) FOR GYP. BOARD SHEETING ATTACHMENT
80. SPANDREL BEAM (BY PEMB) FOR METAL STUD TOP TRACK ATTACHMENT. 1–HR PROTECTION (UL #X528).
81. 2 1/2" METAL STUDS @ 16" O.C.
82. POLYURETHANE EXTERIOR ORNAMENT INLAY AND CHURCH LOGO

Architectural Alliance Incorporated
350 Pine Street, Suite 720
Ellison Plaza
Beaumont, Texas 77701
TEL (409) 866-7196
FAX (409) 866-1745
J. ROSS CLARK, A.I.A.
RONALD M. JONES, A.I.A.
www.archtexas.com

REGISTERED ARCHITECT JAMES R. CLARK 8212 STATE OF TEXAS
8/16/2021

REGISTERED ARCHITECT RONALD M. JONES 13662 STATE OF TEXAS
8/16/2021

UNITED CHRISTIAN ACADEMY
First Pentecostal Church
10619 Highway 69
Port Arthur, TX 77642

ISSUED FOR
SCHEMATIC DESIGN X
DATE: 10/6/2020
DESIGN DEVELOPMENT X
DATE: 3/5/2021
BIDS & CONSTRUCTION X
DATE: 8/2/2021
REVISION:
DATE:
REVISION:
DATE:
REVISION:
DATE:

DRAWINGS SHEET TITLE
WALL SECTIONS

SHEET NUMBER
A507

20105
PROJECT NUMBER

OWNERSHIP OF DRAWINGS THIS DOCUMENT AND THE IDEAS AND DESIGNS INCORPORATED HEREIN, AS AN INSTRUMENT OF PROFESSIONAL SERVICES, IS THE PROPERTY OF ARCHITECTURAL ALLIANCE INCORPORATED AND IS NOT TO BE USED, IN WHOLE OR IN PART, FOR ANY OTHER PROJECT WITHOUT THE WRITTEN AUTHORIZATION OF ARCHITECTURAL ALLIANCE INCORPORATED. © COPYRIGHT 2021

SAVED: MICHAELM
PLOT: LEO TAN
PLOT DATE: 8/16/2021 2:03 PM
SHEET SIZE: ARCH expand D (36.00 x 24.00 Inches)

SEE SHEET A103 FOR TOILET ACCESSORY SCHEDULE

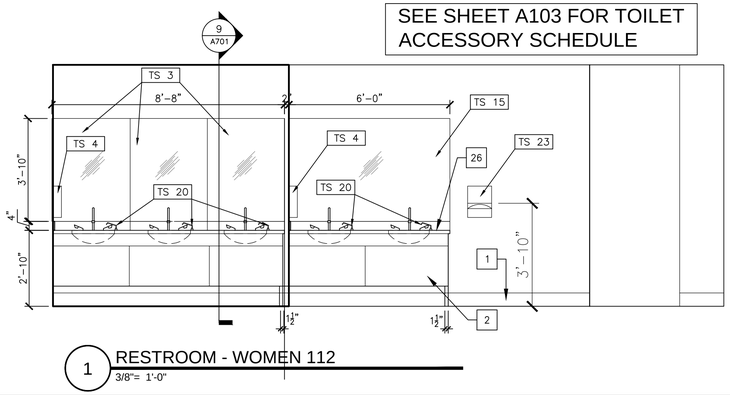

1 RESTROOM - WOMEN 112
3/8"= 1'-0"

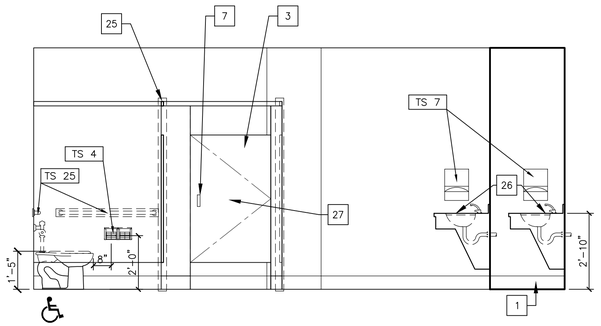

2 RESTROOM - WOMEN 112
SCALE: 3/8"= 1'-0"

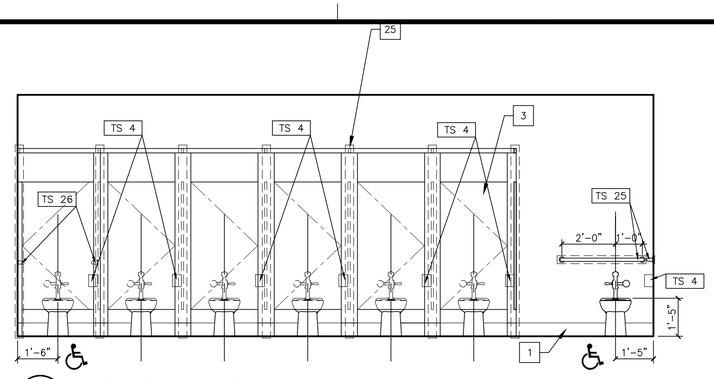

3 RESTROOM - WOMEN 112
SCALE: 3/8"= 1'-0"

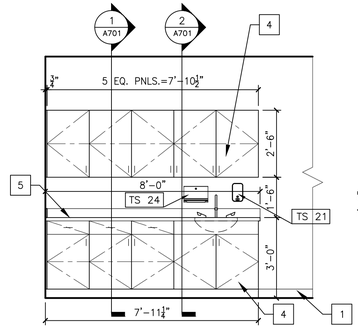

4 TODDLER 109
SCALE: 3/8"= 1'-0"

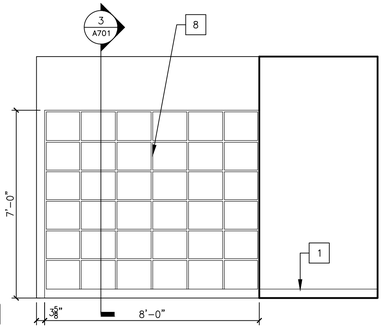

5 TODDLER
SCALE: 3/8"= 1'-0"

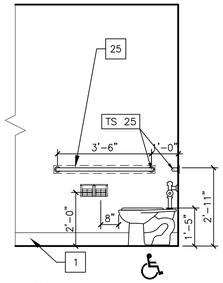

6 TOILT 111
SCALE: 3/8"= 1'-0"

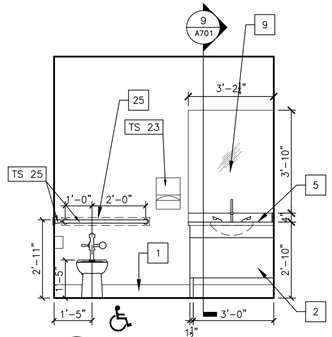

7 TOILT 111
SCALE: 3/8"= 1'-0"

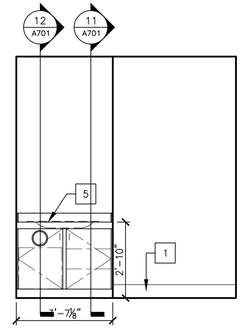

8 TOILT 111
SCALE: 3/8"= 1'-0"

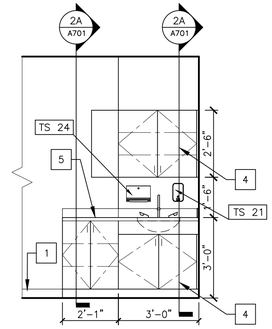

9 NURSERY 108
SCALE: 3/8"= 1'-0"

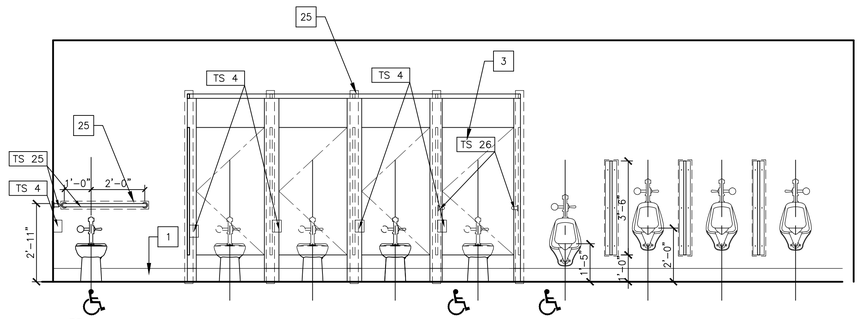

10 MEN 104
SCALE: 3/8"= 1'-0"

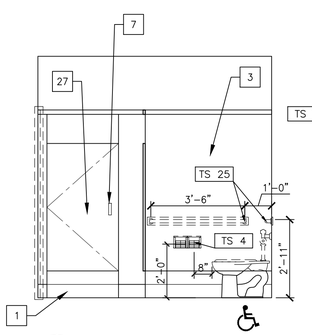

11 MEN 104
SCALE: 3/8"= 1'-0"

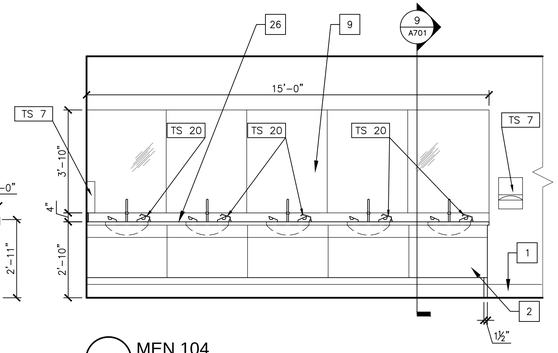

12 MEN 104
SCALE: 3/8"= 1'-0"

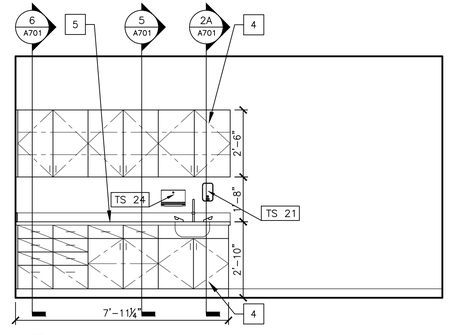

13 WELCOME CENTER 103
SCALE: 3/8"= 1'-0"

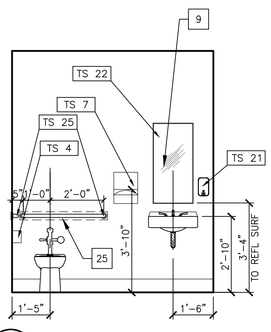

14 ADA TLT 135 & 136
SCALE: 3/8"= 1'-0"

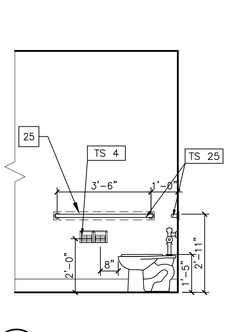

15 ADA TLT 135 & 136
SCALE: 3/8"= 1'-0"

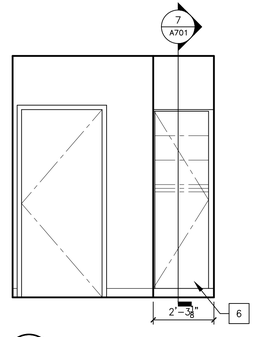

16 ADA TLT 136
SCALE: 3/8"= 1'-0"

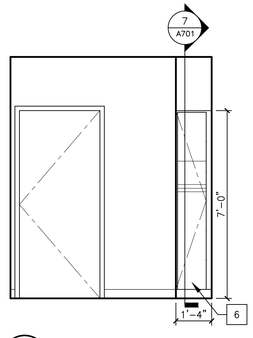

17 ADA TLT 135
SCALE: 3/8"= 1'-0"

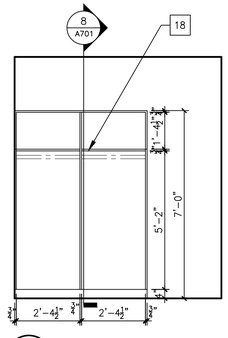

18 BRIDES ROOM 114
SCALE: 3/8"= 1'-0"

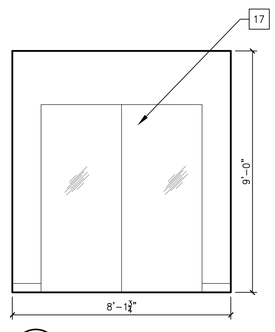

19 BRIDES ROOM 114
SCALE: 3/8"= 1'-0"

INTERIOR ELEVATION KEYNOTES

1. BASE AS SCHEDULED
2. PLASTIC LAMINATE REMOVABLE PANEL
3. OVERHEAD BRACED PLASTIC LAMINATE TOILET PARTITION
4. PLASTIC LAMINATE CABINET WITH INTERIOR MELAMINE FINISH
5. PLASTIC LAMINATE COUNTERTOP AND 4" HIGH BACK, SIDE AND END SPLASH
6. PLASTIC LAMINATE WARDROBE WITH INTERIOR MELAMINE FINISH
7. PULL ON BOTH SIDES OF DOOR
8. PLASTIC LAMINATE OPEN SHELVES
9. ¼" FLOAT GLASS MIRROR WITH STAINLESS STEEL EDGES, VERIFY DIMENSION AT INTERIOR ELEVATION
10. PORTABLE RISERS WITH GUARD RAIL AT CHOIR, BY OWNER
11. BAPTISTRY, REF. SPECIFICATIONS
12. ALUM. STOREFRONT RAILING/SCREEN WALL
13. MANUAL FOLDING PARTITIONS, REF. SPECIFICATIONS
14. SLOPING GYPSUM BOARD ROOF, REF. BUILDING SECTIONS
15. BAPTISTRY SCREEN WALL
16. SOUND BOOTH
17. 2'-3"-0" X 6'-0" MIRROR
18. PLASTIC LAMINTE WARDROBE
19. SPEED BRACE 15X18 METAL BRACKET OVER WOOD BLOCKING AS REQUIRED
20. ¾" ALUMINUM REVEAL SPACED AS SHOWN
21. PLASTIC LAMINATE FINISH OVER ¾" THK. PLYWOOD
22. 3" DIAMETER STAINLESS STEEL GROMMET RING
23. ACOUSTICAL ABSORBENT WALL PANELS. RE. SPECS
24. POWERPOINT PROJECTION SCREEN BY OWNER. NOT IN CONTRACT.
25. PROVIDE SOLID WOOD BLOCKING IN STUD CAVITY FOR MOUNTING OF GRAB BARS, TOILET STALLS, URINAL SCREENS AND CHANGING STATIONS, (TYP)
26. QUARTZ TOP AND SPLASH
27. DOOR SHALL RETURN TO CLOSED POSITION ON ALL ADA STALLS

Architectural Alliance Incorporated
350 Pine Street, Suite 720
Ellison Plaza
Beaumont, Texas 77701
TEL (409) 866-7196
FAX (409) 866-7745
J. ROSS CLARK, A.I.A.
RONALD M. JONES, A.I.A.
www.archtexdal.com

REGISTERED ARCHITECT JAMES R. CLARK 8212 STATE OF TEXAS
8/16/2021

REGISTERED ARCHITECT RONALD M. JONES 13662 STATE OF TEXAS
8/16/2021

UNITED CHRISTIAN ACADEMY
First Pentecostal Church
10619 Highway 69
Port Arthur, TX 77642

ISSUED FOR
SCHEMATIC DESIGN X
DATE: 10/6/2020
DESIGN DEVELOPMENT X
DATE: 3/5/2021
BIDS & CONSTRUCTION X
DATE: 8/2/2021
REVISION:
DATE:
REVISION:
DATE:
REVISION:
DATE:

DRAWINGS SHEET TITLE
INTERIOR ELEVATIONS

SHEET NUMBER
A600

20105
PROJECT NUMBER

SAVED: MICHAELM
PLOT: LEO TAN
PLOT DATE: 8/16/2021 2:04 PM
SHEET SIZE: ARCH expand D (36.00 x 24.00 Inches)

OWNERSHIP OF DRAWINGS THIS DOCUMENT AND THE IDEAS AND DESIGNS INCORPORATED HEREIN, AS AN INSTRUMENT OF PROFESSIONAL SERVICES, IS THE PROPERTY OF ARCHITECTURAL ALLIANCE INCORPORATED AND IS NOT TO BE USED, IN WHOLE OR IN PART, FOR ANY OTHER PROJECT WITHOUT THE WRITTEN AUTHORIZATION OF ARCHITECTURAL ALLIANCE INCORPORATED. © COPYRIGHT 2021

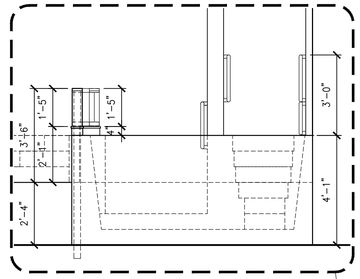

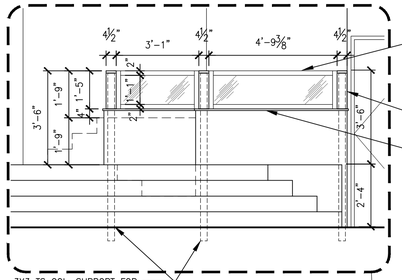

INTERIOR ELEVATION KEYNOTES

1. BASE AS SCHEDULED
2. PLASTIC LAMINATE REMOVABLE PANEL
3. OVERHEAD BRACED PLASTIC LAMINATE TOILET PARTITION
4. PLASTIC LAMINATE CABINET WITH INTERIOR MELAMINE FINISH
5. PLASTIC LAMINATE COUNTERTOP AND 4" HIGH BACK, SIDE AND END SPLASH
6. PLASTIC LAMINATE WARDROBE WITH INTERIOR MELAMINE FINISH
7. PULL ON BOTH SIDES OF DOOR
8. PLASTIC LAMINATE OPEN SHELVES
9. ¼" FLOAT GLASS MIRROR WITH STAINLESS STEEL EDGES, VERIFY DIMENSION AT INTERIOR ELEVATION
10. PORTABLE RISERS WITH GUARD RAIL AT CHOIR, BY OWNER
11. BAPTISTRY. REF. SPECIFICATIONS
12. ALUM. STOREFRONT RAILING/SCREEN WALL
13. MANUAL FOLDING PARTITIONS, REF. SPECIFICATIONS
14. SLOPING GYPSUM BOARD ROOF, REF. BUILDING SECTIONS
15. BAPTISTRY SCREEN WALL
16. SOUND BOOTH
17. 2'-3'-0" X 6'-0" MIRROR
18. PLASTIC LAMINTE WARDROBE
19. SPEED BRACE 15X1⅛ METAL BRACKET OVER WOOD BLOCKING AS REQUIRED
20. ¾" ALUMINUM REVEAL SPACED AS SHOWN
21. PLASTIC LAMINATE FINISH OVER ¾" THK. PLYWOOD
22. 3" DIAMETER STAINLESS STEEL GROMMET RING
23. ACOUSTICAL ABSORBENT WALL PANELS. RE. SPECS
24. POWERPOINT PROJECTION SCREEN BY OWNER. NOT IN CONTRACT.
25. PROVIDE SOLID WOOD BLOCKING IN STUD CAVITY FOR MOUNTING OF GRAB BARS, TOILET STALLS, URINAL SCREENS AND CHANGING STATIONS, (TYP)
26. QUARTZ TOP AND SPLASH
27. DOOR SHALL RETURN TO CLOSED POSITION ON ALL ADA STALLS

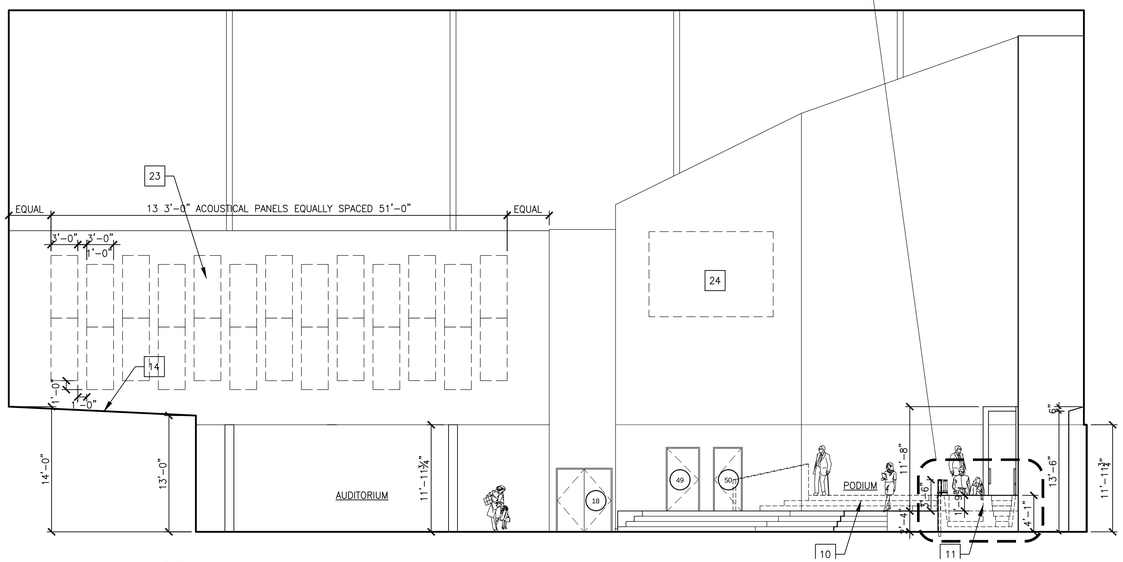

1 AUDITORIUM 131
SCALE: 1/8" = 1'-0"

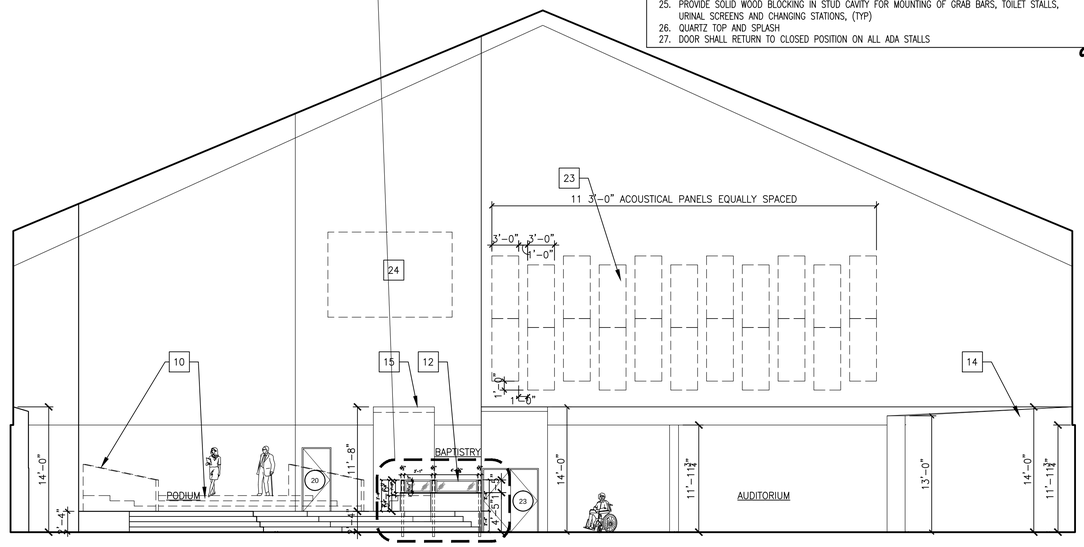

2 AUDITORIUM 131
SCALE: 1/8" = 1'-0"

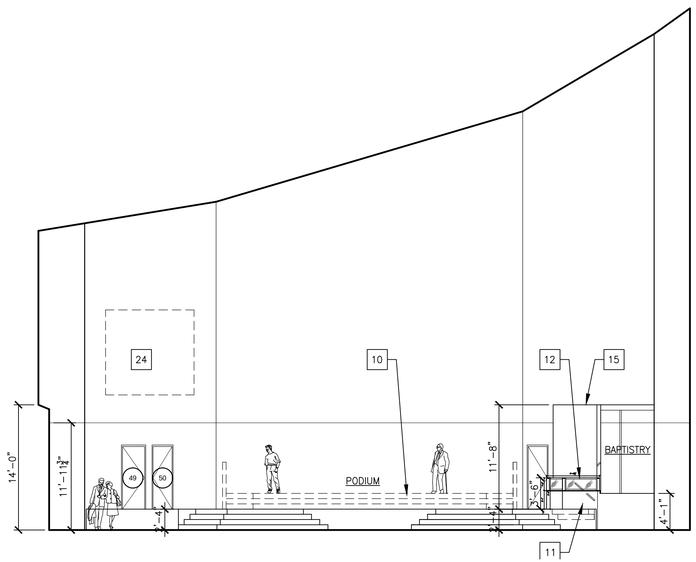

3 AUDITORIUM 131
SCALE: 1/8" = 1'-0"

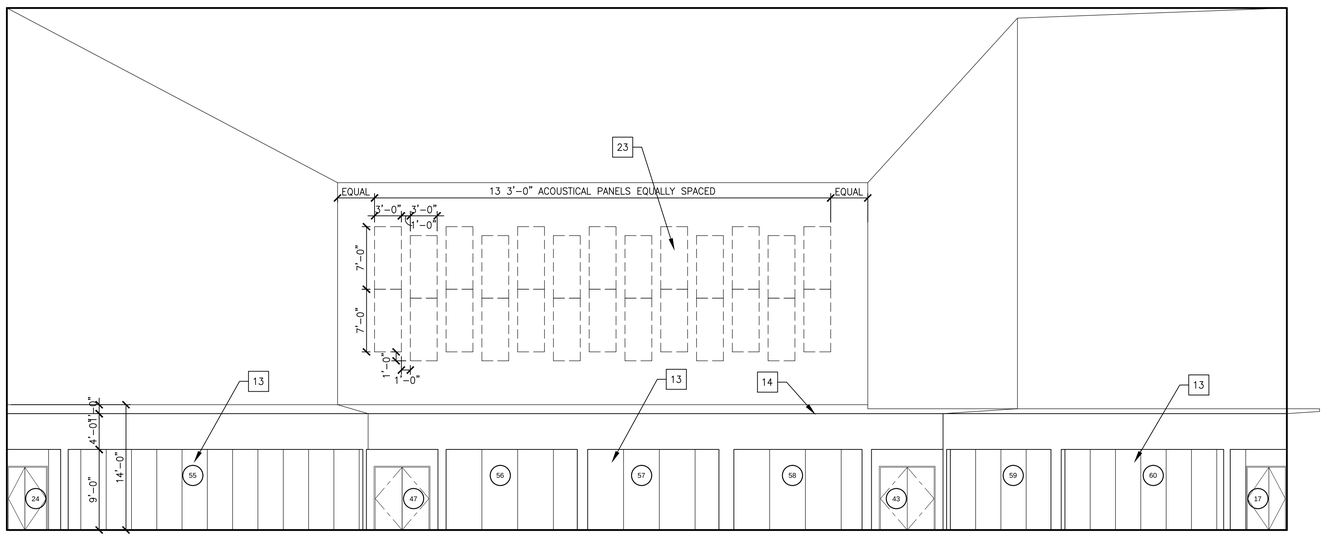

4 AUDITORIUM 131
SCALE: 1/8" = 1'-0"

Architectural Alliance Incorporated
350 Pine Street, Suite 720
Ellison Plaza
Beaumont, Texas 77701
TEL (409) 866-7196
FAX (409) 866-1745
J. ROSS CLARK, A.I.A.
RONALD M. JONES, A.I.A.
www.archtectall.com

REGISTERED ARCHITECT JAMES R. CLARK 8212 STATE OF TEXAS
8/16/2021

REGISTERED ARCHITECT RONALD M. JONES 13662 STATE OF TEXAS
8/16/2021

UNITED CHRISTIAN ACADEMY
First Pentecostal Church
10619 Highway 69
Port Arthur, TX 77642

ISSUED FOR
SCHEMATIC DESIGN X
DATE: 10/6/2020
DESIGN DEVELOPMENT X
DATE: 3/5/2021
BIDS & CONSTRUCTION X
DATE: 8/2/2021
REVISION:
DATE:
REVISION:
DATE:
REVISION:
DATE:

DRAWINGS SHEET TITLE
INTERIOR ELEVATION

SHEET NUMBER
A601

20105
PROJECT NUMBER

SAVED: LEOT
PLOT: LEO TAN
PLOT DATE: 8/16/2021 4:31 PM
SHEET SIZE: ARCH expand D (36.00 x 24.00 Inches)

OWNERSHIP OF DRAWINGS THIS DOCUMENT AND THE IDEAS AND DESIGNS INCORPORATED HEREIN, AS AN INSTRUMENT OF PROFESSIONAL SERVICES, IS THE PROPERTY OF ARCHITECTURAL ALLIANCE INCORPORATED AND IS NOT TO BE USED, IN WHOLE OR IN PART, FOR ANY OTHER PROJECT WITHOUT THE WRITTEN AUTHORIZATION OF ARCHITECTURAL ALLIANCE INCORPORATED. © COPYRIGHT 2021

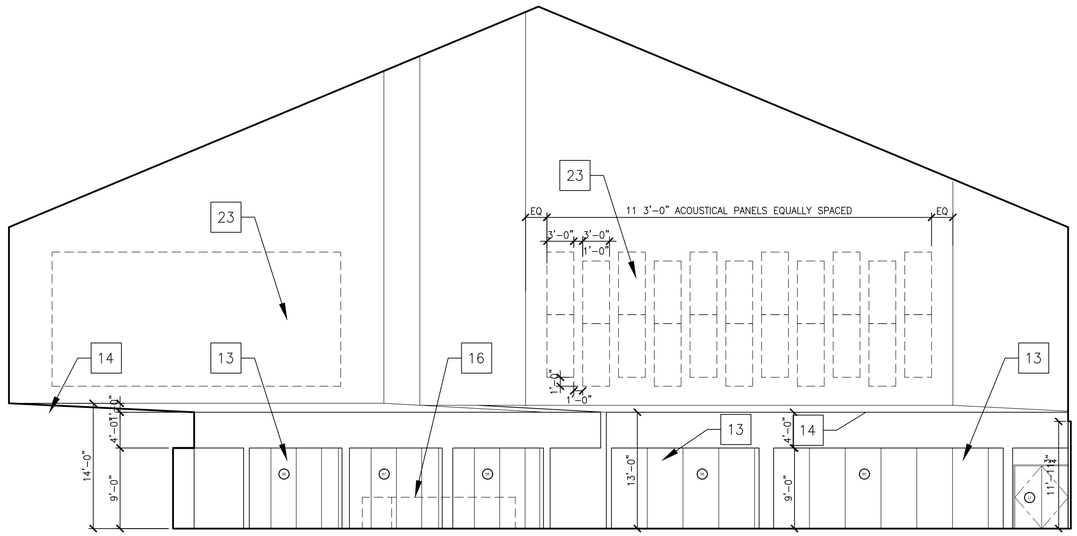

1 AUDITORIUM 131
SCALE: 1/8" = 1'-0"

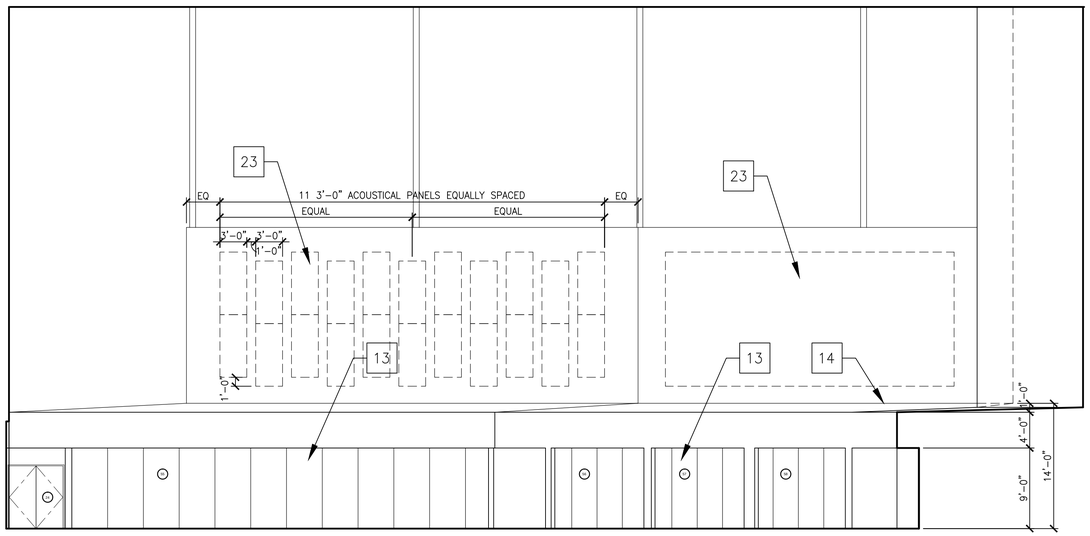

2 AUDITORIUM 131
SCALE: 1/8" = 1'-0"

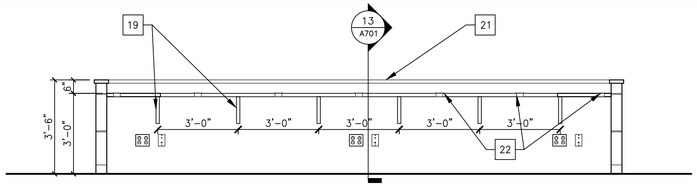

3 SOUND BOOTH
SCALE: 3/8" = 1'-0"

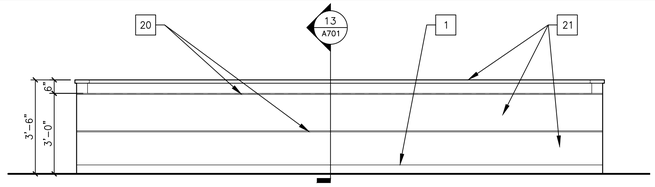

4 SOUND BOOTH
SCALE: 3/8" = 1'-0"

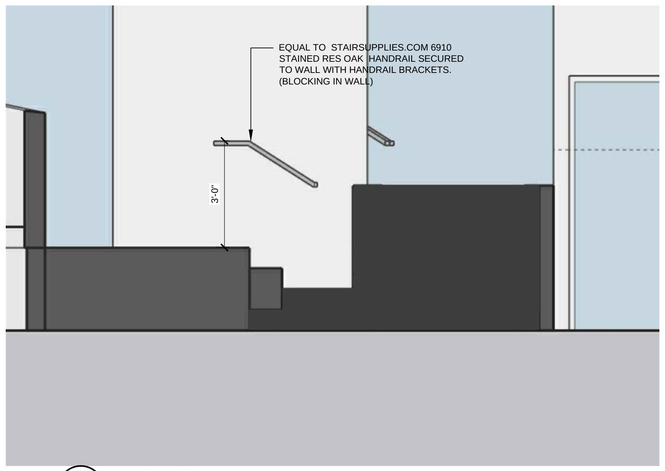

5 BAPTISTRY
SCALE: 3/8" = 1'-0"

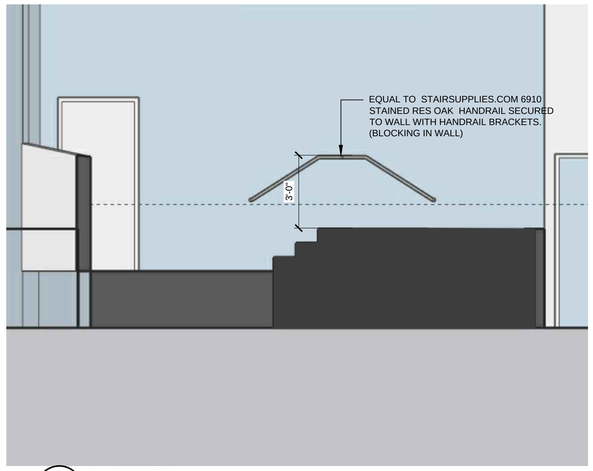

6 BAPTISTRY
SCALE: 3/8" = 1'-0"

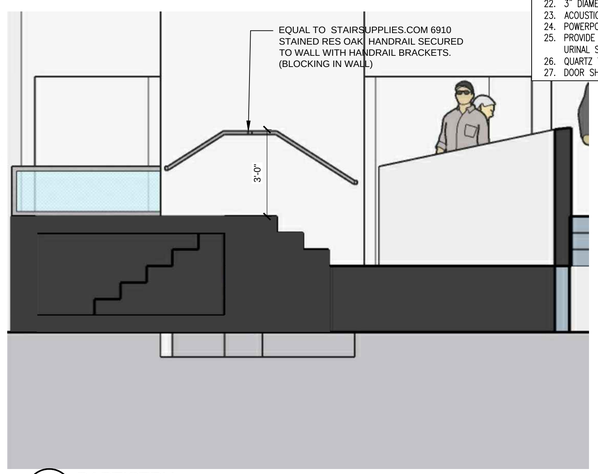

7 BAPTISTRY
SCALE: 3/8" = 1'-0"

INTERIOR ELEVATION KEYNOTES

1. BASE AS SCHEDULED
2. PLASTIC LAMINATE REMOVABLE PANEL
3. OVERHEAD BRACED PLASTIC LAMINATE TOILET PARTITION
4. PLASTIC LAMINATE CABINET WITH INTERIOR MELAMINE FINISH
5. PLASTIC LAMINATE COUNTERTOP AND 4" HIGH BACK, SIDE AND END SPLASH
6. PLASTIC LAMINATE WARDROBE WITH INTERIOR MELAMINE FINISH
7. PULL ON BOTH SIDES OF DOOR
8. PLASTIC LAMINATE OPEN SHELVES
9. ¼" FLOAT GLASS MIRROR WITH STAINLESS STEEL EDGES, VERIFY DIMENSION AT INTERIOR ELEVATION
10. PORTABLE RISERS WITH GUARD RAIL AT CHOIR, BY OWNER
11. BAPTISTRY. REF. SPECIFICATIONS
12. ALUM. STOREFRONT RAILING/SCREEN WALL
13. MANUAL FOLDING PARTITIONS, REF. SPECIFICATIONS
14. SLOPING GYPSUM BOARD ROOF, REF. BUILDING SECTIONS
15. BAPTISTRY SCREEN WALL
16. SOUND BOOTH
17. 2-3'-0" X 6'-0" MIRROR
18. PLASTIC LAMINTE WARDROBE
19. SPEED BRACE 15X18 METAL BRACKET OVER WOOD BLOCKING AS REQUIRED
20. ¼" ALUMINUM REVEAL SPACED AS SHOWN
21. PLASTIC LAMINATE FINISH OVER ¾" THK. PLYWOOD
22. 3" DIAMETER STAINLESS STEEL GROMMET RING
23. ACOUSTICAL ABSORBENT WALL PANELS. RE. SPECS
24. POWERPOINT PROJECTION SCREEN BY OWNER. NOT IN CONTRACT.
25. PROVIDE SOLID WOOD BLOCKING IN STUD CAVITY FOR MOUNTING OF GRAB BARS, TOILET STALLS, URINAL SCREENS AND CHANGING STATIONS, (TYP)
26. QUARTZ TOP AND SPLASH
27. DOOR SHALL RETURN TO CLOSED POSITION ON ALL ADA STALLS

Architectural Alliance Incorporated
350 Pine Street, Suite 720
Ednco Plaza
Beaumont, Texas 77701
TEL (409) 866-7196
FAX (409) 866-1745
J. ROSS CLARK, A.I.A.
RONALD M. JONES, A.I.A.
www.architectall.com

REGISTERED ARCHITECT
JAMES R. CLARK
8212
STATE OF TEXAS
8/16/2021

REGISTERED ARCHITECT
RONALD M. JONES
13662
STATE OF TEXAS
8/16/2021

UNITED CHRISTIAN ACADEMY
First Pentecostal Church
10619 Highway 69
Port Arthur, TX 77642

ISSUED FOR
SCHEMATIC DESIGN [X]
DATE: 10/6/2020
DESIGN DEVELOPMENT [X]
DATE: 3/5/2021
BIDS & CONSTRUCTION [X]
DATE: 8/2/2021
REVISION:
DATE:
REVISION:
DATE:
REVISION:
DATE:

DRAWINGS SHEET TITLE
INTERIOR ELEVATION

SHEET NUMBER
A602

20105
PROJECT NUMBER

OWNERSHIP OF DRAWINGS THIS DOCUMENT AND THE IDEAS AND DESIGNS INCORPORATED HEREIN, AS AN INSTRUMENT OF PROFESSIONAL SERVICES, IS THE PROPERTY OF ARCHITECTURAL ALLIANCE INCORPORATED AND IS NOT TO BE USED, IN WHOLE OR IN PART, FOR ANY OTHER PROJECT WITHOUT THE WRITTEN AUTHORIZATION OF ARCHITECTURAL ALLIANCE INCORPORATED. © COPYRIGHT 2021

SAVED: LEOT
PLOT: LEO TAN
PLOT DATE: 8/16/2021 2:05 PM
SHEET SIZE: ARCH expand D (36.00 x 24.00 Inches)

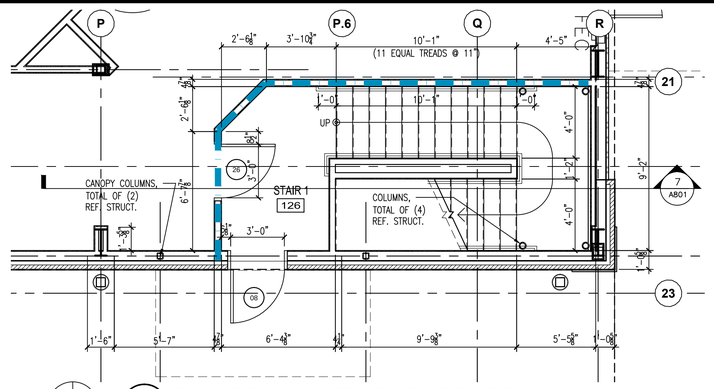

1 ENLARGED PLAN - STAIR 1 (FIRST FLOOR)
SCALE: 1/4" = 1'-0"

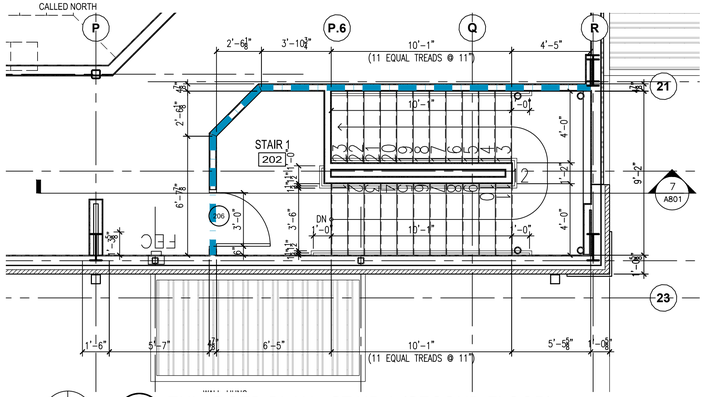

2 ENLARGED PLAN - STAIR 1 (SECOND FLOOR)
SCALE: 1/4" = 1'-0"

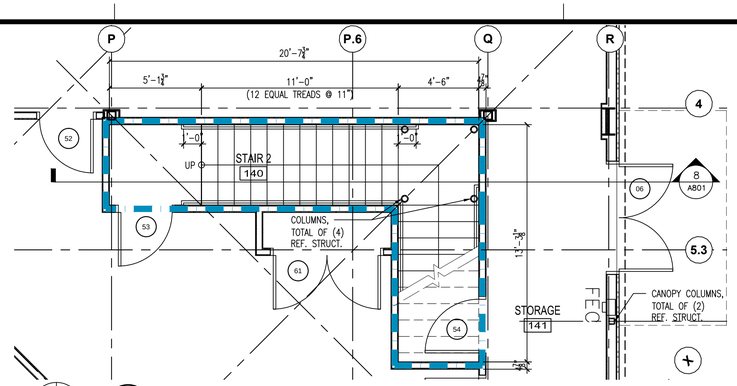

3 ENLARGED PLAN - STAIR 2 (FIRST FLOOR)
SCALE: 1/4" = 1'-0"

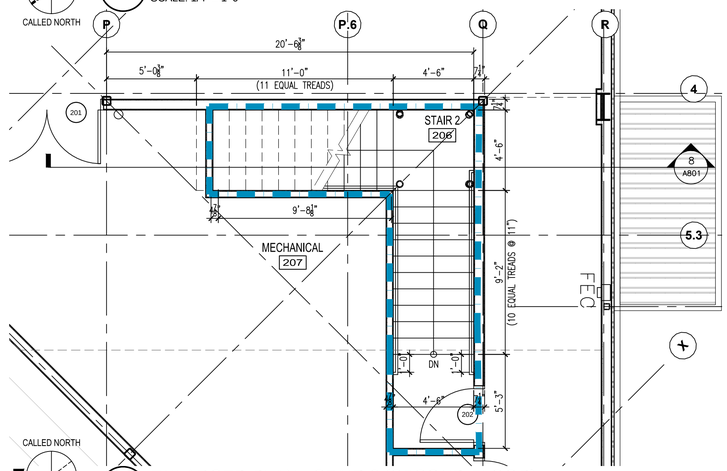

4 ENLARGED PLAN - STAIR 2 (SECOND FLOOR)
SCALE: 1/4" = 1'-0"

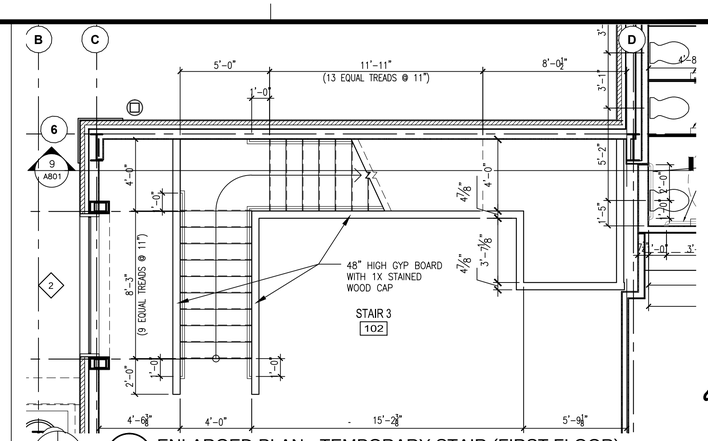

5 ENLARGED PLAN - TEMPORARY STAIR (FIRST FLOOR)
SCALE: 1/4" = 1'-0"

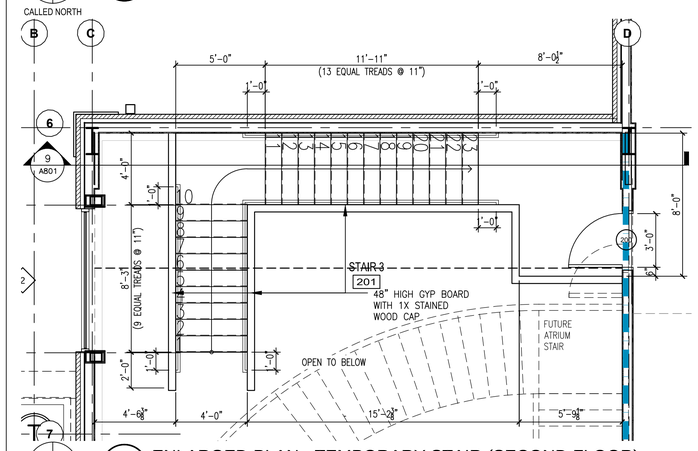

6 ENLARGED PLAN - TEMPORARY STAIR (SECOND FLOOR)
SCALE: 1/4" = 1'-0"

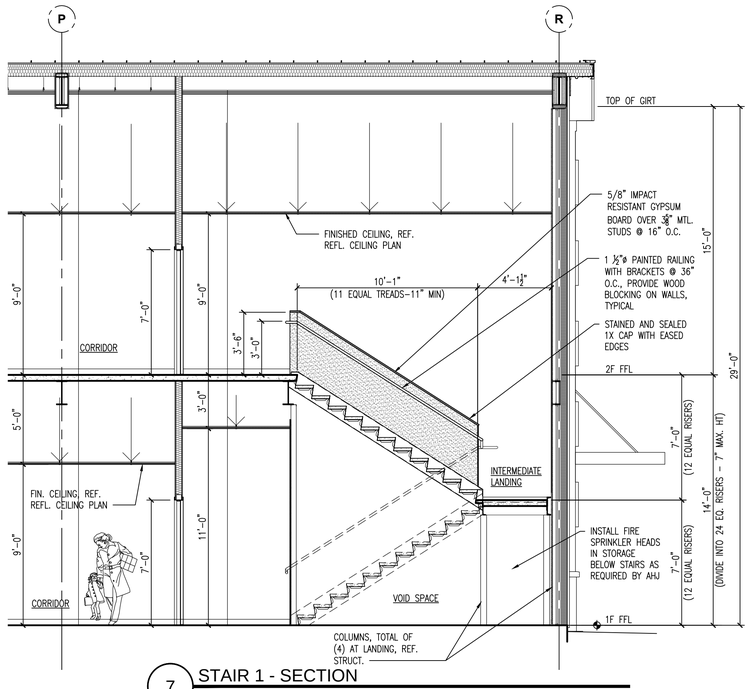

7 STAIR 1 - SECTION
SCALE: 1/4" = 1'-0"

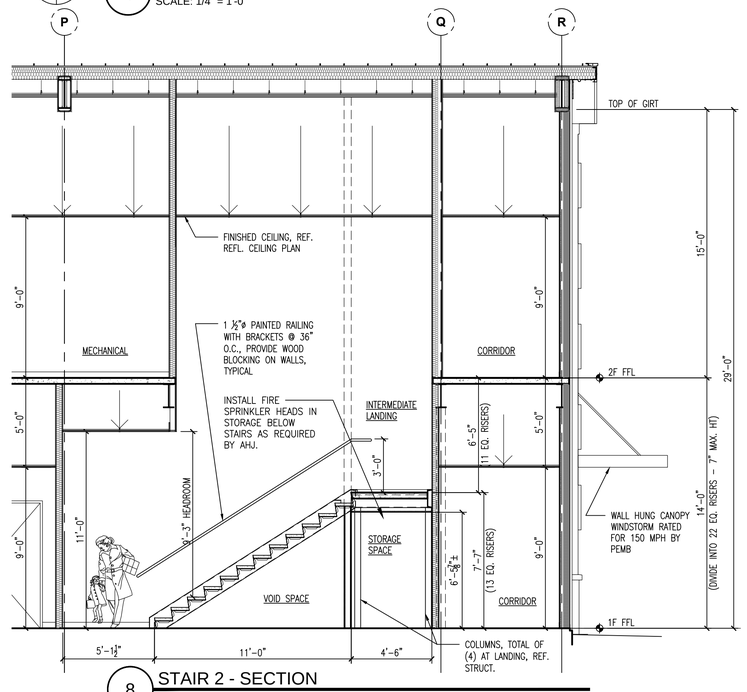

8 STAIR 2 - SECTION
SCALE: 1/4" = 1'-0"

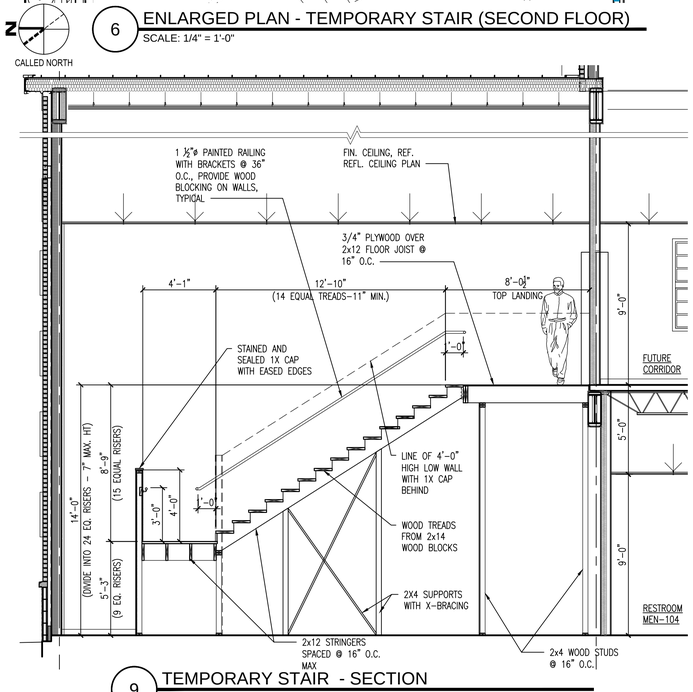

9 TEMPORARY STAIR - SECTION
SCALE: 1/4" = 1'-0"

Architectural Alliance Incorporated
350 Pine Street, Suite 720
Ellison Plaza
Beaumont, Texas 77701
TEL (409) 866-7166
FAX (409) 866-1745
J. ROSS CLARK, A.I.A.
RONALD M. JONES, A.I.A.
www.archtectall.com

REGISTERED ARCHITECT JAMES R. CLARK 8212 STATE OF TEXAS
8/16/2021

REGISTERED ARCHITECT RONALD M. JONES 13662 STATE OF TEXAS
8/16/2021

UNITED CHRISTIAN ACADEMY
First Pentecostal Church
Port Arthur, TX 77642
10619 Highway 69

ISSUED FOR
SCHEMATIC DESIGN [X]
DATE: 10/6/2020
DESIGN DEVELOPMENT [X]
DATE: 3/5/2021
BIDS & CONSTRUCTION [X]
DATE: 8/2/2021
REVISION:
DATE:
REVISION:
DATE:
REVISION:
DATE:

DRAWINGS SHEET TITLE
ENLARGED STAIR PLANS AND SECTIONS

SHEET NUMBER
A700

20105
PROJECT NUMBER

SAVED: MICHAELM
PLOT: LEO TAN
PLOT DATE: 8/16/2021 2:06 PM
SHEET SIZE: ARCH expand D (36.00 x 24.00 Inches)

OWNERSHIP OF DRAWINGS THIS DOCUMENT AND THE IDEAS AND DESIGNS INCORPORATED HEREIN, AS AN INSTRUMENT OF PROFESSIONAL SERVICES, IS THE PROPERTY OF ARCHITECTURAL ALLIANCE INCORPORATED AND IS NOT TO BE USED, IN WHOLE OR IN PART, FOR ANY OTHER PROJECT WITHOUT THE WRITTEN AUTHORIZATION OF ARCHITECTURAL ALLIANCE INCORPORATED. © COPYRIGHT 2021

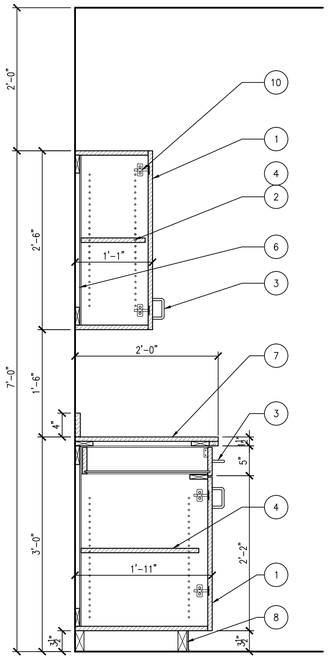

1 MILLWORK SECTION
SCALE: 1" = 1'-0"

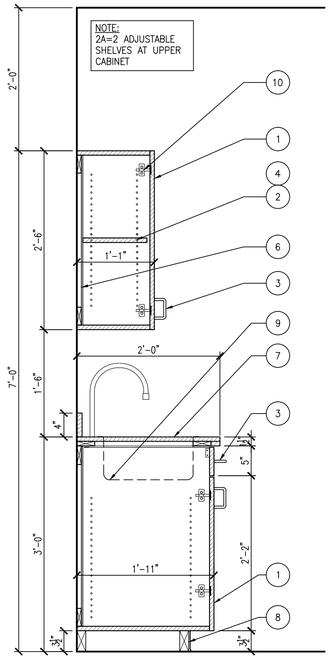

2 MILLWORK SECTION
SCALE: 1" = 1'-0"

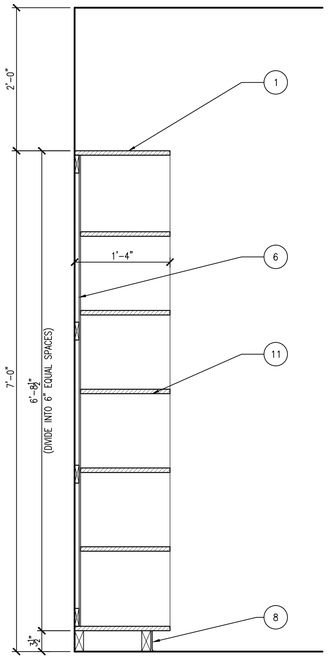

3 MILLWORK SECTION
SCALE: 1" = 1'-0"

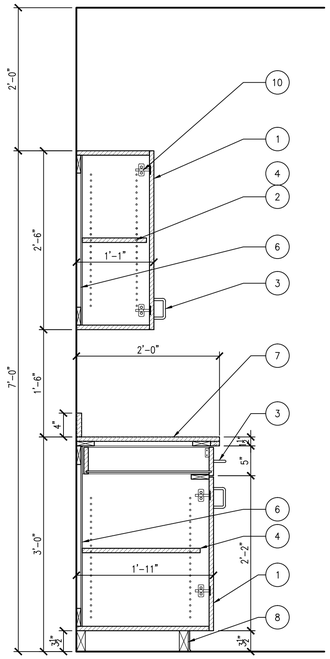

4 MILLWORK SECTION
SCALE: 1" = 1'-0"

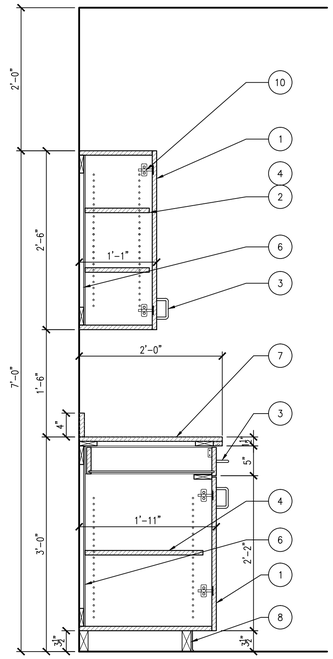

5 MILLWORK SECTION
SCALE: 1" = 1'-0"

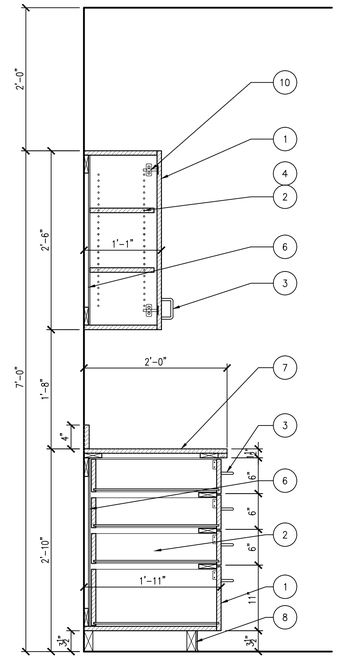

6 MILLWORK SECTION
SCALE: 1" = 1'-0"

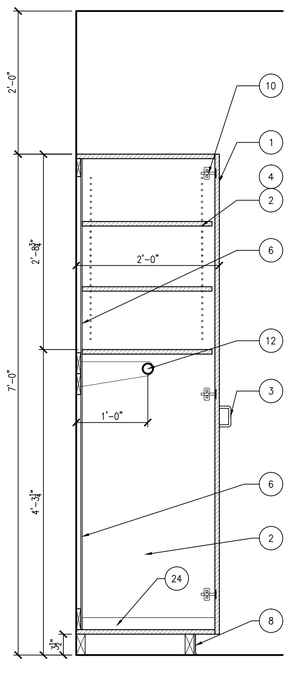

7 MILLWORK SECTION
SCALE: 1" = 1'-0"

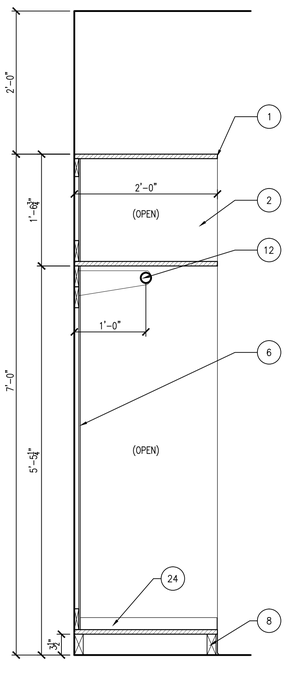

8 MILLWORK SECTION
SCALE: 1" = 1'-0"

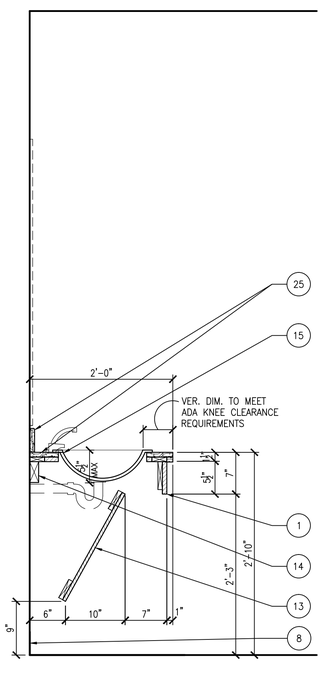

9 MILLWORK SECTION
SCALE: 1" = 1'-0"

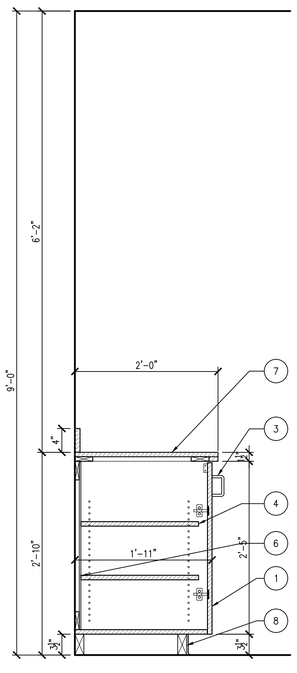

10 MILLWORK SECTION
SCALE: 1" = 1'-0"

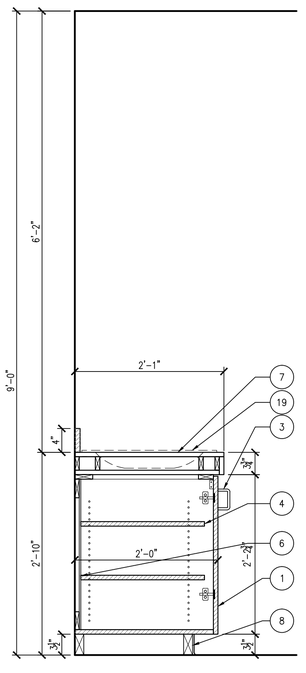

11 MILLWORK SECTION
SCALE: 1" = 1'-0"

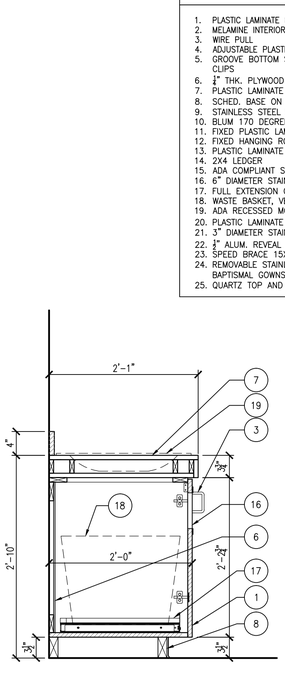

12 MILLWORK SECTION
SCALE: 1" = 1'-0"

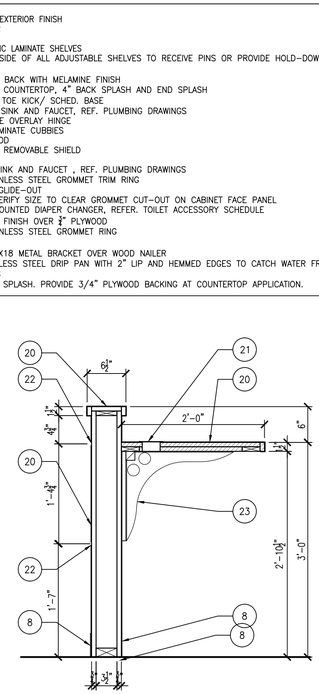

13 MILLWORK SECTION
SCALE: 1" = 1'-0"

CASEWORK SECTION KEY NOTES

1. PLASTIC LAMINATE EXTERIOR FINISH
2. MELAMINE INTERIOR
3. WIRE PULL
4. ADJUSTABLE PLASTIC LAMINATE SHELVES
5. GROOVE BOTTOM SIDE OF ALL ADJUSTABLE SHELVES TO RECEIVE PINS OR PROVIDE HOLD-DOWN CLIPS
6. ¾" THK. PLYWOOD BACK WITH MELAMINE FINISH
7. PLASTIC LAMINATE COUNTERTOP, 4" BACK SPLASH AND END SPLASH
8. SCHED. BASE ON TOE KICK/ SCHED. BASE
9. STAINLESS STEEL SINK AND FAUCET, REF. PLUMBING DRAWINGS
10. BLUM 170 DEGREE OVERLAY HINGE
11. FIXED PLASTIC LAMINATE CUBBIES
12. FIXED HANGING ROD
13. PLASTIC LAMINATE REMOVABLE SHIELD
14. 2X4 LEDGER
15. ADA COMPLIANT SINK AND FAUCET , REF. PLUMBING DRAWINGS
16. 6" DIAMETER STAINLESS STEEL GROMMET TRIM RING
17. FULL EXTENSION GLIDE-OUT
18. WASTE BASKET, VERIFY SIZE TO CLEAR GROMMET CUT-OUT ON CABINET FACE PANEL
19. ADA RECESSED MOUNTED DIAPER CHANGER, REFER. TOILET ACCESSORY SCHEDULE
20. PLASTIC LAMINATE FINISH OVER ¾" PLYWOOD
21. 3" DIAMETER STAINLESS STEEL GROMMET RING
22. 1" ALUM. REVEAL
23. SPEED BRACE 15X18 METAL BRACKET OVER WOOD NAILER
24. REMOVABLE STAINLESS STEEL DRIP PAN WITH 2" LIP AND HEMMED EDGES TO CATCH WATER FROM BAPTISMAL GOWNS
25. QUARTZ TOP AND SPLASH. PROVIDE 3/4" PLYWOOD BACKING AT COUNTERTOP APPLICATION.

Architectural Alliance Incorporated
350 Pine Street, Suite 720
Ellison Plaza
Beaumont, Texas 77701
TEL (409) 866-7196
FAX (409) 866-1745
J. ROSS CLARK, A.I.A.
RONALD M. JONES, A.I.A.
www.architectall.com

REGISTERED ARCHITECT JAMES R. CLARK 8212 STATE OF TEXAS
8/16/2021

REGISTERED ARCHITECT RONALD M. JONES 13662 STATE OF TEXAS
8/16/2021

UNITED CHRISTIAN ACADEMY
First Pentecostal Church
10619 Highway 69
Port Arthur, TX 77642

ISSUED FOR
SCHEMATIC DESIGN [X]
DATE: 10/6/2020
DESIGN DEVELOPMENT [X]
DATE: 3/5/2021
BIDS & CONSTRUCTION [X]
DATE: 8/2/2021
REVISION:
DATE:
REVISION:
DATE:
REVISION:
DATE:

DRAWINGS SHEET TITLE
MILLWORK SECTIONS

SHEET NUMBER
A701

20105
PROJECT NUMBER

OWNERSHIP OF DRAWINGS THIS DOCUMENT AND THE IDEAS AND DESIGNS INCORPORATED HEREIN, AS AN INSTRUMENT OF PROFESSIONAL SERVICES, IS THE PROPERTY OF ARCHITECTURAL ALLIANCE INCORPORATED AND IS NOT TO BE USED, IN WHOLE OR IN PART, FOR ANY OTHER PROJECT WITHOUT THE WRITTEN AUTHORIZATION OF ARCHITECTURAL ALLIANCE INCORPORATED. © COPYRIGHT 2021

SAVED: LEOT
PLOT: LEO TAN
PLOT DATE: 8/16/2021 2:06 PM
SHEET SIZE: ARCH expand D (36.00 x 24.00 inches)

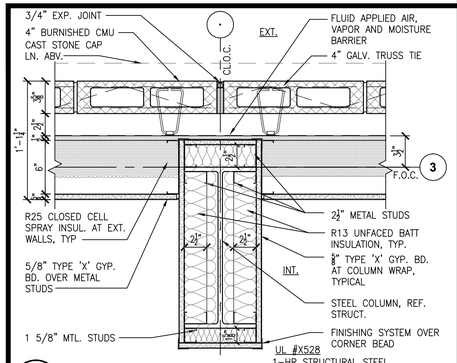

1 COLUMN DETAIL-PLAN

SCALE: 1 1/2" = 1'-0"

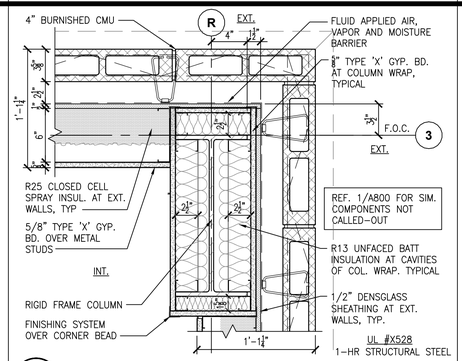

2 COLUMN DETAIL-PLAN

SCALE: 1 1/2" = 1'-0"

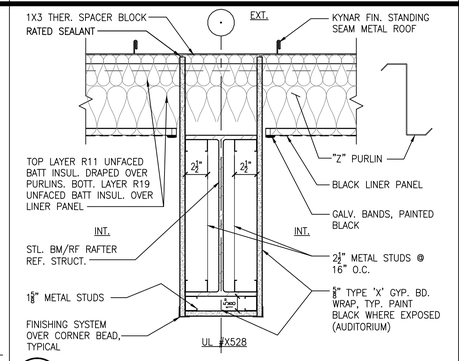

3 RIGID FRAME RAFTER DET.-SECTION

SCALE: 1 1/2" = 1'-0"

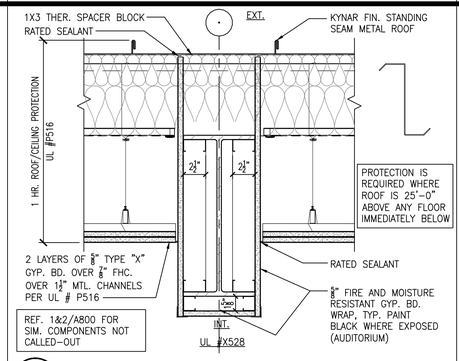

4 RIGID FRAME RAFTER DET.-SECTION

SCALE: 1 1/2" = 1'-0"

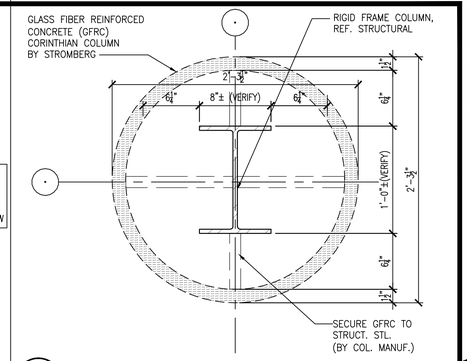

5 COLUMN DETAIL-PLAN (PORTE COCHERE)

SCALE: 1 1/2" = 1'-0"

6 NOT USED

SCALE: 1 1/2" = 1'-0"

7 NOT USED

SCALE: 1 1/2" = 1'-0"

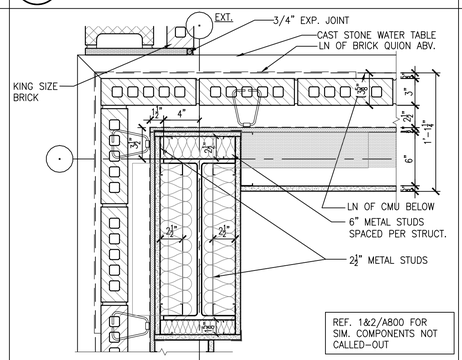

8 COLUMN DETAIL-PLAN

SCALE: 1 1/2" = 1'-0"

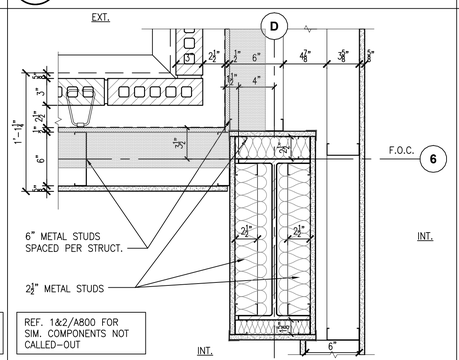

9 COLUMN DETAIL-PLAN

SCALE: 1 1/2" = 1'-0"

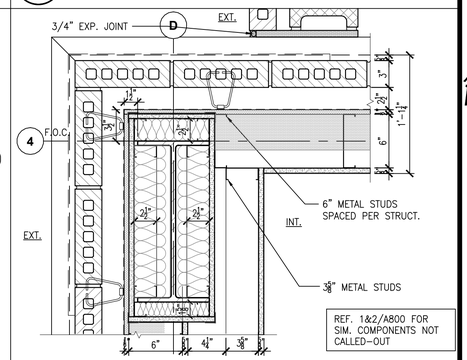

10 COLUMN DETAIL-PLAN

SCALE: 1 1/2" = 1'-0"

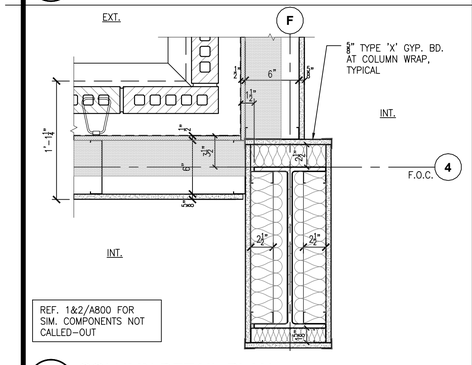

11 COLUMN DETAIL-PLAN

SCALE: 1 1/2" = 1'-0"

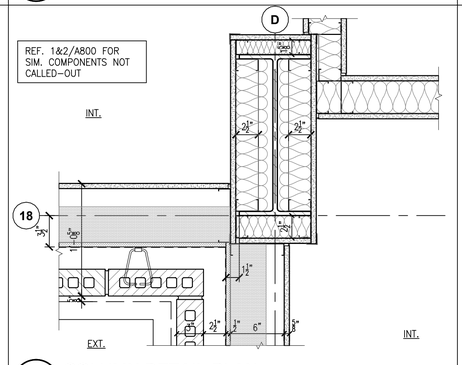

12 COLUMN DETAIL-PLAN

SCALE: 1 1/2" = 1'-0"

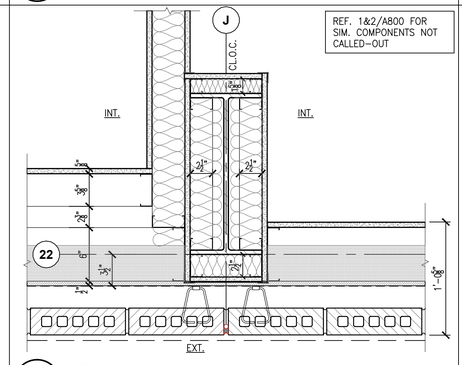

13 COLUMN DETAIL-PLAN

SCALE: 1 1/2" = 1'-0"

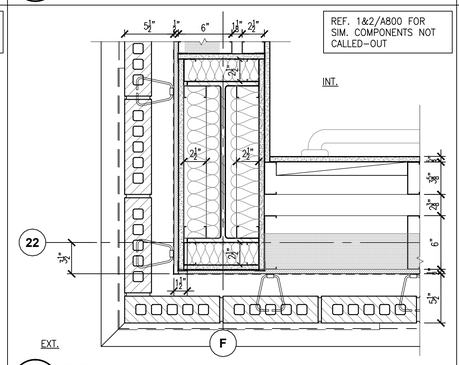

14 COLUMN DETAIL-PLAN

SCALE: 1 1/2" = 1'-0"

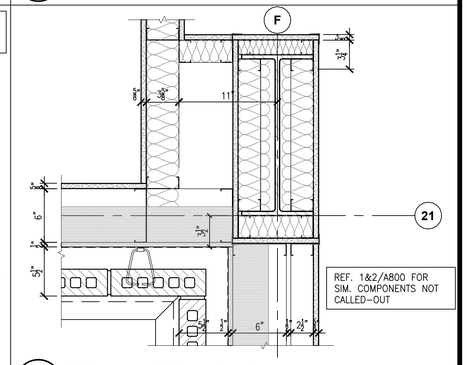

15 COLUMN DETAIL-PLAN

SCALE: 1 1/2" = 1'-0"

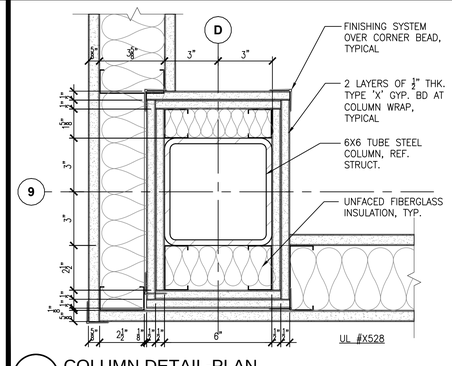

16 COLUMN DETAIL-PLAN

SCALE: 1 1/2" = 1'-0"

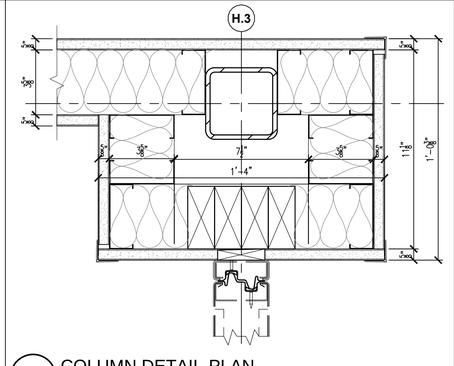

17 COLUMN DETAIL-PLAN

SCALE: 1 1/2" = 1'-0"

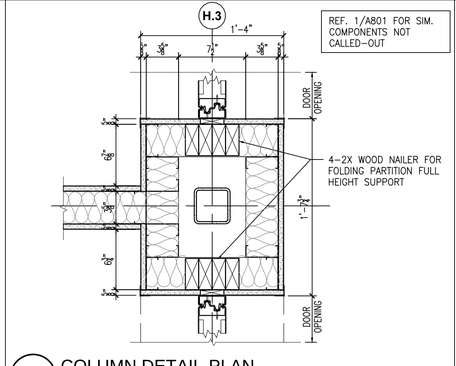

18 COLUMN DETAIL-PLAN

SCALE: 1 1/2" = 1'-0"

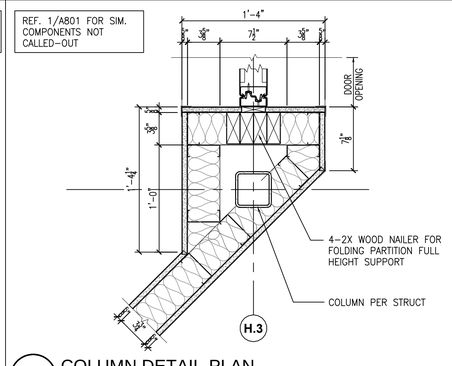

19 COLUMN DETAIL-PLAN

SCALE: 1 1/2" = 1'-0"

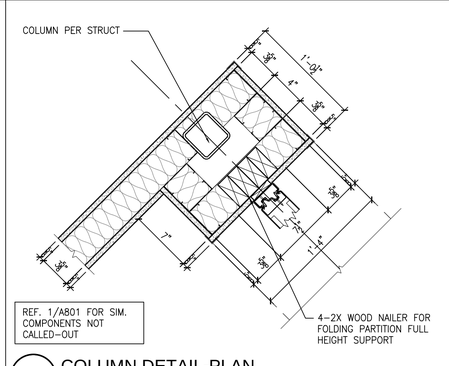

20 COLUMN DETAIL-PLAN

SCALE: 1 1/2" = 1'-0"

Architectural Alliance Incorporated
350 Pine Street, Suite 720
Ednoor Plaza
Beaumont, Texas 77701
TEL (409) 866-7196
FAX (409) 866-1745
J. ROSS CLARK, A.I.A.
RONALD M. JONES, A.I.A.
www.architectall.com

REGISTERED ARCHITECT JAMES R. CLARK 8212 STATE OF TEXAS

8/16/2021

REGISTERED ARCHITECT RONALD M. JONES 13662 STATE OF TEXAS

8/16/2021

UNITED CHRISTIAN ACADEMY

First Pentecostal Church

10619 Highway 69

Port Arthur, TX 77642

ISSUED FOR

SCHEMATIC DESIGN X
DATE: 10/6/2020

DESIGN DEVELOPMENT X
DATE: 3/5/2021

BIDS & CONSTRUCTION X
DATE: 8/2/2021

REVISION:
DATE:

REVISION:
DATE:

REVISION:
DATE:

DRAWINGS SHEET TITLE

COLUMN DETAILS

SHEET NUMBER

A800

20105
PROJECT NUMBER

SAVED: LEOT
PLOT: LEO TAN
PLOT DATE: 8/16/2021 2:06 PM
SHEET SIZE: ARCH expand D (36.00 x 24.00 Inches)

OWNERSHIP OF DRAWINGS THIS DOCUMENT AND THE IDEAS AND DESIGNS INCORPORATED HEREIN, AS AN INSTRUMENT OF PROFESSIONAL SERVICES, IS THE PROPERTY OF ARCHITECTURAL ALLIANCE INCORPORATED AND IS NOT TO BE USED, IN WHOLE OR IN PART, FOR ANY OTHER PROJECT WITHOUT THE WRITTEN AUTHORIZATION OF ARCHITECTURAL ALLIANCE INCORPORATED. © COPYRIGHT 2021

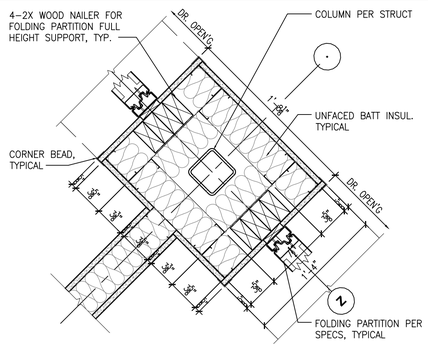

1 COLUMN DETAIL-PLAN
SCALE: 1 1/2" = 1'-0"

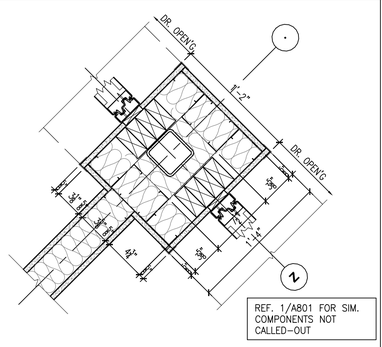

REF. 1/A801 FOR SIM. COMPONENTS NOT CALLED-OUT

2 COLUMN DETAIL-PLAN
SCALE: 1 1/2" = 1'-0"

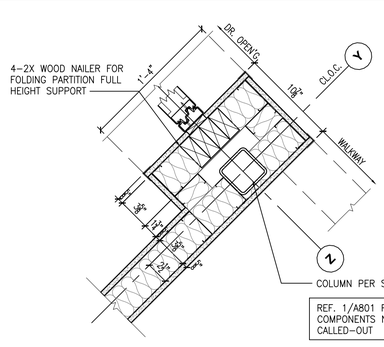

REF. 1/A801 FOR SIM. COMPONENTS NOT CALLED-OUT

3 COLUMN DETAIL-PLAN
SCALE: 1 1/2" = 1'-0"

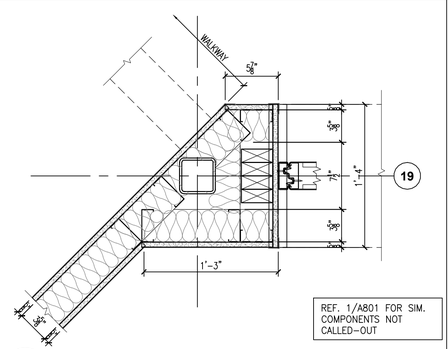

REF. 1/A801 FOR SIM. COMPONENTS NOT CALLED-OUT

4 COLUMN DETAIL-PLAN
SCALE: 1 1/2" = 1'-0"

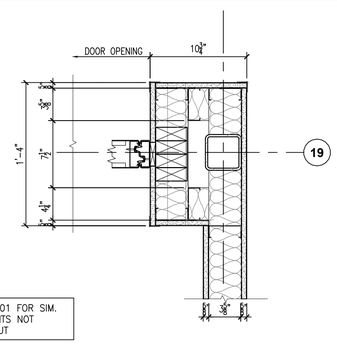

REF. 1/A801 FOR SIM. COMPONENTS NOT CALLED-OUT

5 COLUMN DETAIL-PLAN
SCALE: 1 1/2" = 1'-0"

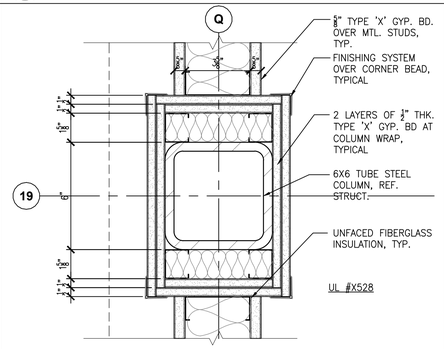

6 COLUMN DETAIL-PLAN
SCALE: 3" = 1'-0"

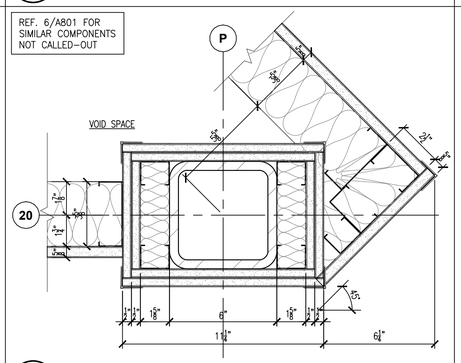

7 COLUMN DETAIL-PLAN
SCALE: 3" = 1'-0"

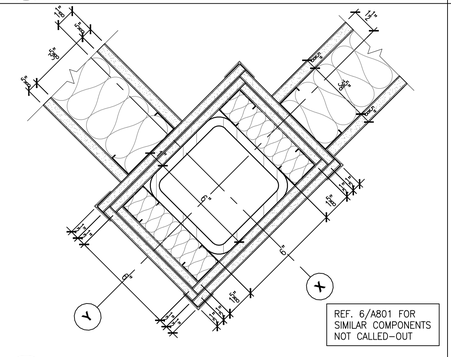

REF. 6/A801 FOR SIMILAR COMPONENTS NOT CALLED-OUT

8 COLUMN DETAIL-PLAN
SCALE: 3" = 1'-0"

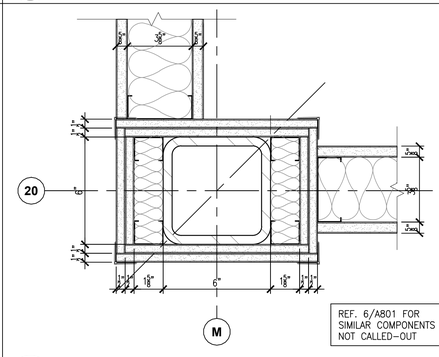

REF. 6/A801 FOR SIMILAR COMPONENTS NOT CALLED-OUT

9 COLUMN DETAIL-PLAN
SCALE: 3" = 1'-0"

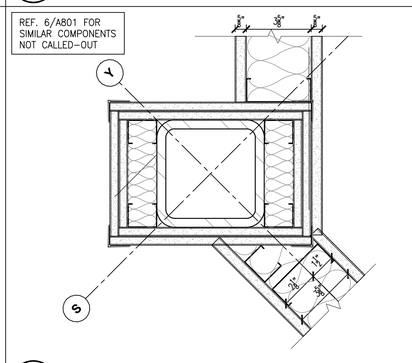

10 COLUMN DETAIL-PLAN
SCALE: 3" = 1'-0"

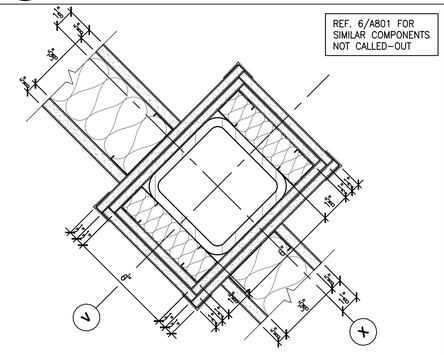

11 COLUMN DETAIL-PLAN
SCALE: 3" = 1'-0"

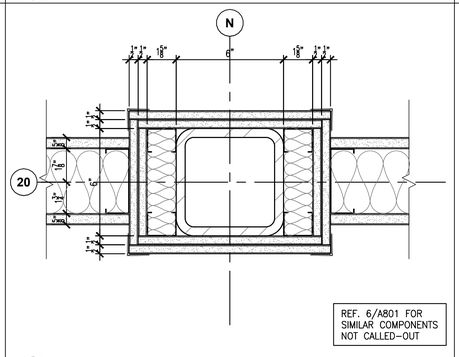

12 COLUMN DETAIL-PLAN
SCALE: 3" = 1'-0"

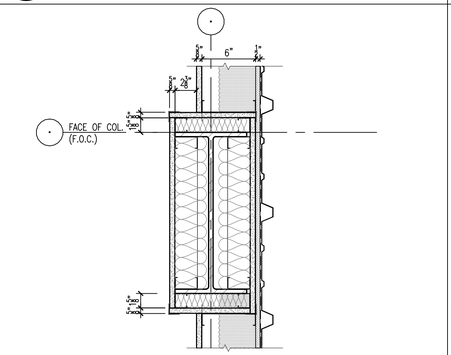

13 COLUMN DETAIL-PLAN
SCALE: 3" = 1'-0"

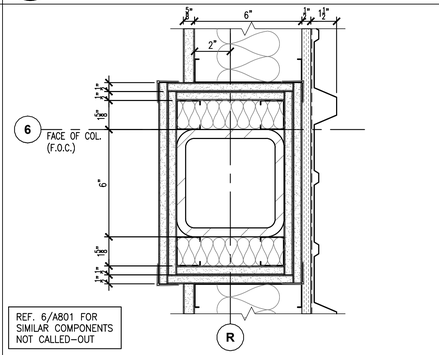

REF. 6/A801 FOR SIMILAR COMPONENTS NOT CALLED-OUT

14 COLUMN DETAIL-PLAN
SCALE: 3" = 1'-0"

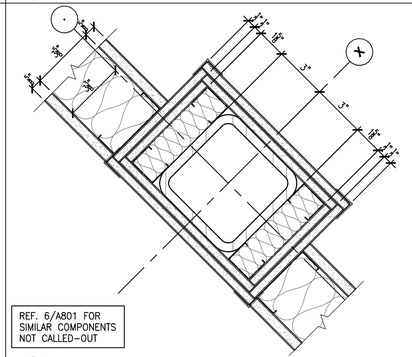

15 COLUMN DETAIL-PLAN
SCALE: 3" = 1'-0"

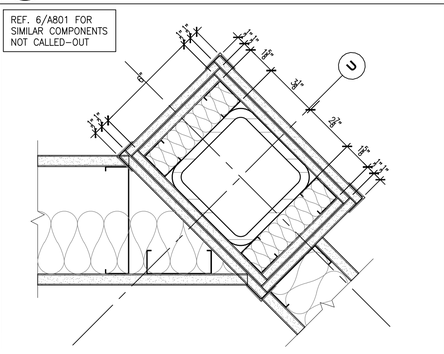

16 COLUMN DETAIL-PLAN
SCALE: 3" = 1'-0"

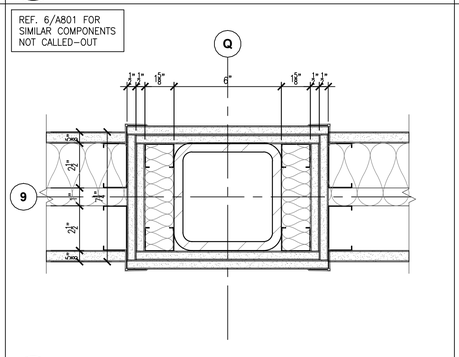

17 COLUMN DETAIL-PLAN
SCALE: 3" = 1'-0"

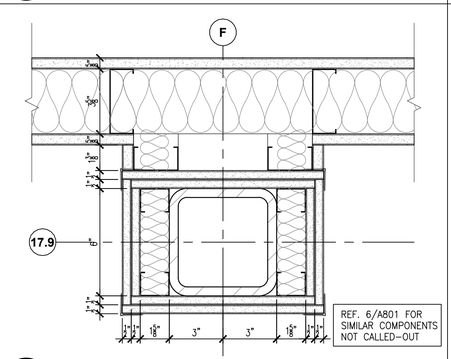

18 COLUMN DETAIL-PLAN
SCALE: 3" = 1'-0"

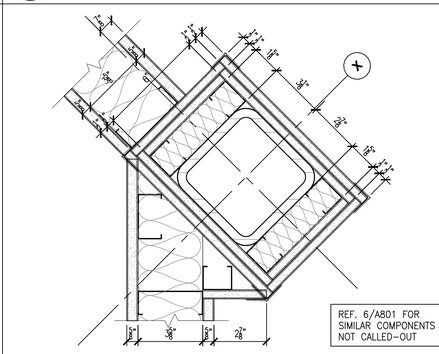

19 COLUMN DETAIL-PLAN
SCALE: 3" = 1'-0"

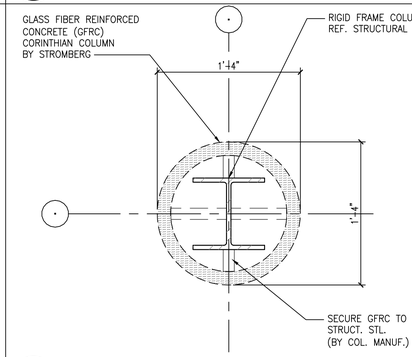

20 COLUMN DETAIL-PLAN
SCALE: 1 1/2" = 1'-0"

ARCHITECTURAL ALLIANCE INCORPORATED
Architectural Alliance Incorporated
339 Pine Street, Suite 720
Edison Plaza
Beaumont, Texas 77701
TEL (409) 866-7166
FAX (409) 866-1745
J. ROSS CLARK, A.I.A.
RONALD M. JONES, A.I.A.
www.archtxcall.com

REGISTERED ARCHITECT JAMES R. CLARK 8212 STATE OF TEXAS
8/16/2021

REGISTERED ARCHITECT RONALD M. JONES 13662 STATE OF TEXAS
8/16/2021

UNITED CHRISTIAN ACADEMY
First Pentecostal Church
10619 Highway 69
Port Arthur, TX 77642

ISSUED FOR
SCHEMATIC DESIGN [X]
DATE: 10/6/2020
DESIGN DEVELOPMENT [X]
DATE: 3/5/2021
BIDS & CONSTRUCTION [X]
DATE: 8/2/2021
REVISION:
DATE:
REVISION:
DATE:
REVISION:
DATE:

DRAWINGS SHEET TITLE
COLUMN DETAILS

SHEET NUMBER
A801

20105
PROJECT NUMBER

OWNERSHIP OF DRAWINGS THIS DOCUMENT AND THE IDEAS AND DESIGNS INCORPORATED HEREIN, AS AN INSTRUMENT OF PROFESSIONAL SERVICES, IS THE PROPERTY OF ARCHITECTURAL ALLIANCE INCORPORATED AND IS NOT TO BE USED, IN WHOLE OR IN PART, FOR ANY OTHER PROJECT WITHOUT THE WRITTEN AUTHORIZATION OF ARCHITECTURAL ALLIANCE INCORPORATED. © COPYRIGHT 2021

SAVED: LEOT
PLOT: LEO TAN
PLOT DATE: 8/16/2021 2:07 PM
SHEET SIZE: ARCH expand D (36.00 x 24.00 Inches)

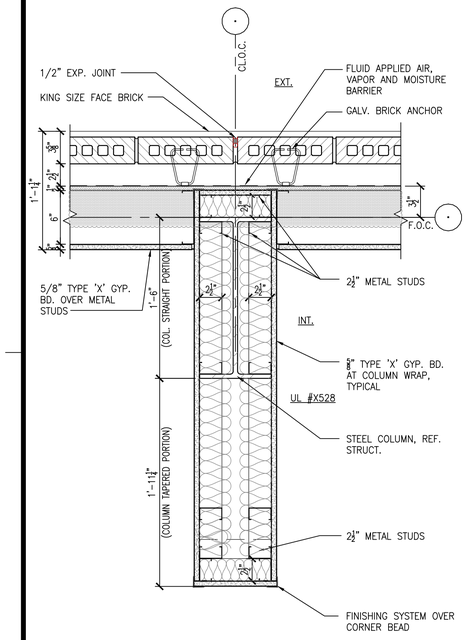

REF. 1&2/A800 FOR SIM. COMPONENTS NOT CALLED-OUT

6 COLUMN DETAIL-PLAN
SCALE: 1 1/2" = 1'-0"

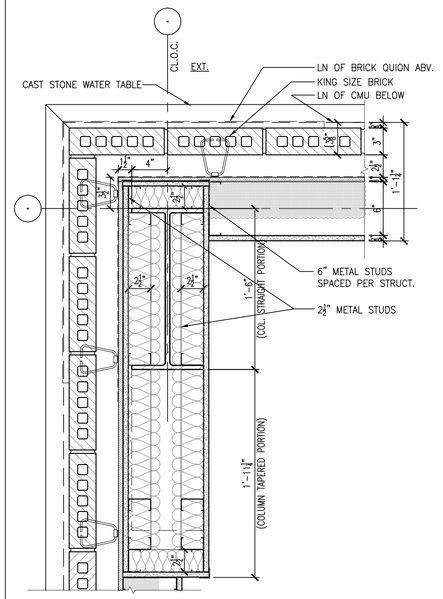

REF. 1&2/A800 FOR SIM. COMPONENTS NOT CALLED-OUT

7 COLUMN DETAIL-PLAN
SCALE: 1 1/2" = 1'-0"

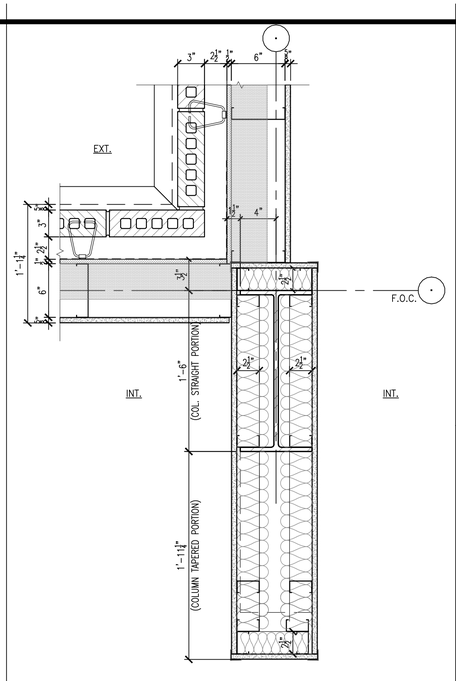

REF. 1&2/A800 FOR SIM. COMPONENTS NOT CALLED-OUT

8 COLUMN DETAIL-PLAN
SCALE: 1 1/2" = 1'-0"

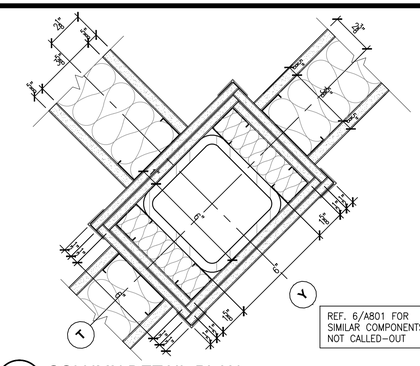

REF. 6/A801 FOR SIMILAR COMPONENTS NOT CALLED-OUT

4 COLUMN DETAIL-PLAN
SCALE: 3" = 1'-0"

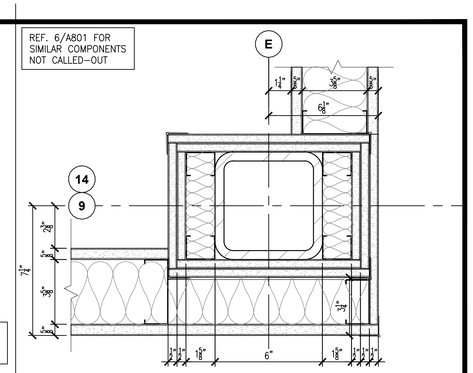

5 COLUMN DETAIL-PLAN
SCALE: 3" = 1'-0"

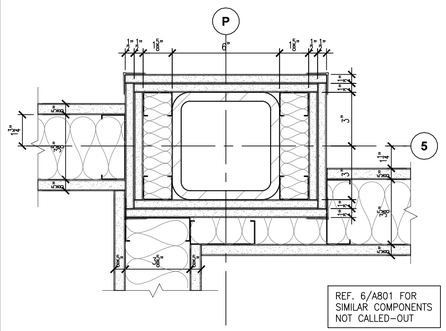

REF. 6/A801 FOR SIMILAR COMPONENTS NOT CALLED-OUT

9 COLUMN DETAIL-PLAN
SCALE: 3" = 1'-0"

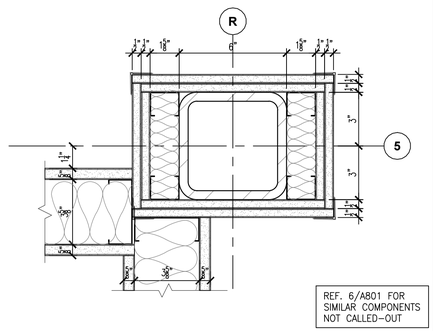

REF. 6/A801 FOR SIMILAR COMPONENTS NOT CALLED-OUT

10 COLUMN DETAIL-PLAN
SCALE: 3" = 1'-0"

Architectural Alliance Incorporated
350 Pine Street, Suite 720
Ellison Plaza
Beaumont, Texas 77701
TEL (409) 866-7166
FAX (409) 866-1745
J. ROSS CLARK, A.I.A.
RONALD M. JONES, A.I.A.
www.archtxcstal.com

REGISTERED ARCHITECT JAMES R. CLARK 8212 STATE OF TEXAS
8/16/2021

REGISTERED ARCHITECT RONALD M. JONES 13662 STATE OF TEXAS
8/16/2021

UNITED CHRISTIAN ACADEMY
First Pentecostal Church
10619 Highway 69
Port Arthur, TX 77642

ISSUED FOR
SCHEMATIC DESIGN [X]
DATE: 10/6/2020
DESIGN DEVELOPMENT [X]
DATE: 3/5/2021
BIDS & CONSTRUCTION [X]
DATE: 8/2/2021
REVISION:
DATE:
REVISION:
DATE:
REVISION:
DATE:

DRAWINGS SHEET TITLE
COLUMN DETAILS

SHEET NUMBER
A802

20105
PROJECT NUMBER

OWNERSHIP OF DRAWINGS THIS DOCUMENT AND THE IDEAS AND DESIGNS INCORPORATED HEREIN, AS AN INSTRUMENT OF PROFESSIONAL SERVICES, IS THE PROPERTY OF ARCHITECTURAL ALLIANCE INCORPORATED AND IS NOT TO BE USED, IN WHOLE OR IN PART, FOR ANY OTHER PROJECT WITHOUT THE WRITTEN AUTHORIZATION OF ARCHITECTURAL ALLIANCE INCORPORATED. © COPYRIGHT 2021

SAVED: LEOT
PLOT: LEO TAN
PLOT DATE: 8/16/2021 2:07 PM
SHEET SIZE: ARCH expand D (36.00 x 24.00 Inches)

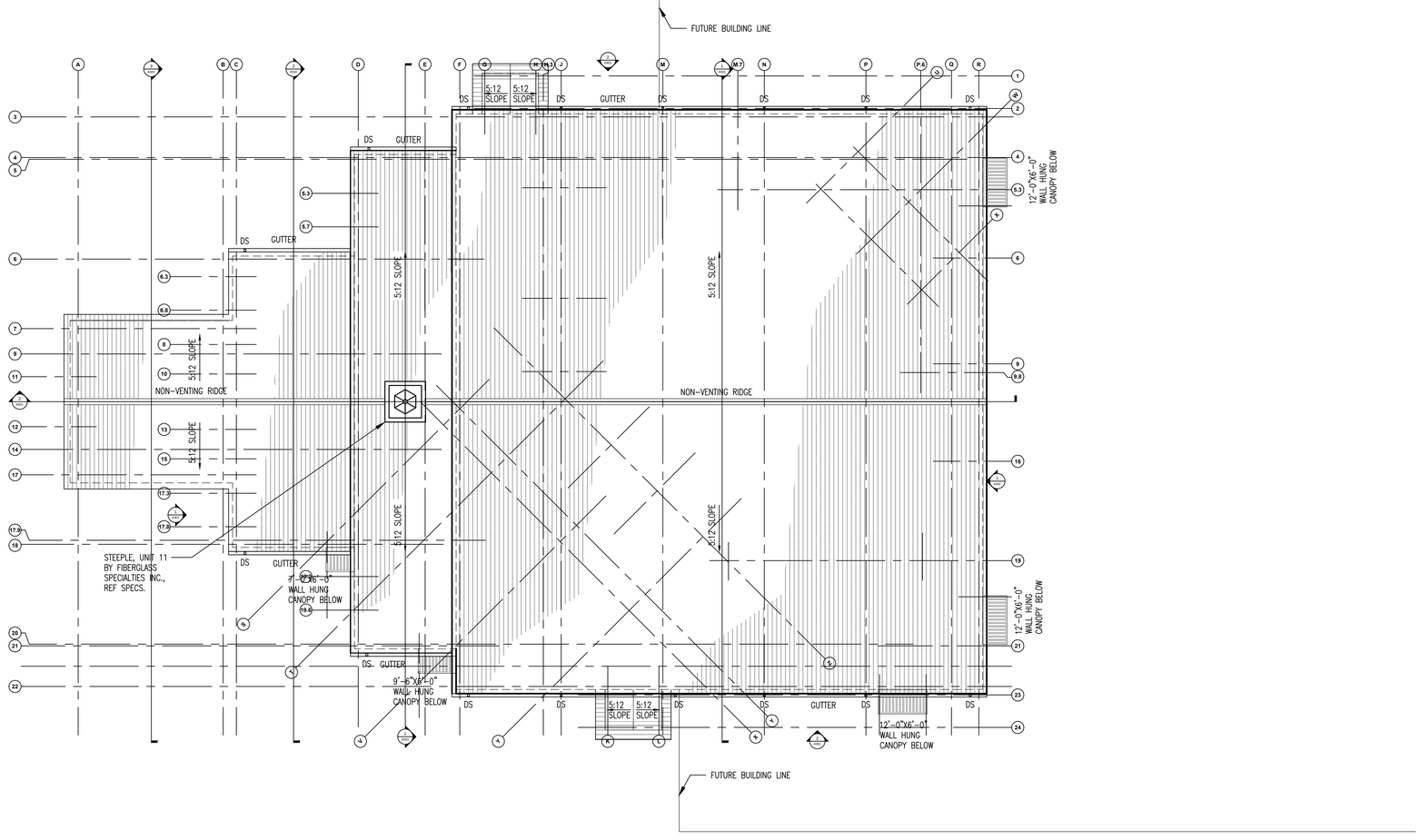

CALLED NORTH

1 ROOF PLAN
SCALE: 1/16" = 1'-0"

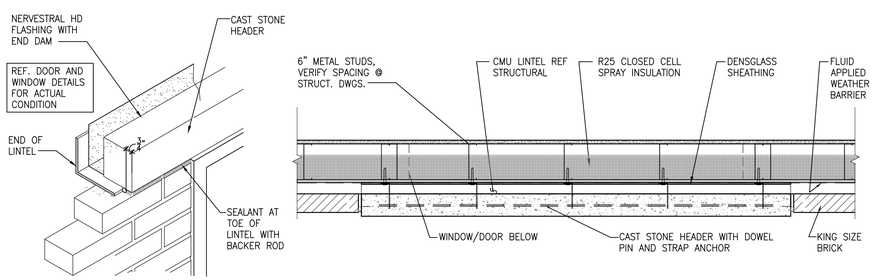

16 LINTEL DETAIL AT DOOR/WINDOW OPENINGS
SCALE: 1 1/2"=1'-0"

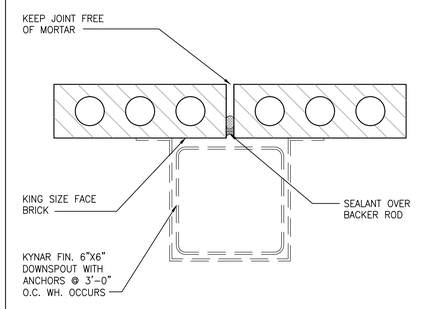

18 BRICK EXPANSION JOINT - PLAN
SCALE: 3" = 1'-0"

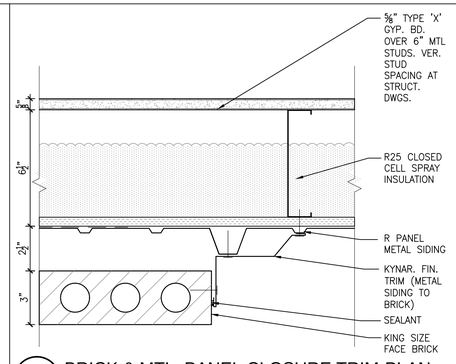

19 BRICK & MTL. PANEL CLOSURE TRIM-PLAN
SCALE: 3" = 1'-0"

SAVED: MICHAELM
PLOT: LEO TAN
PLOT DATE: 8/16/2021 2:07 PM
SHEET SIZE: ARCH expand D (36.00 x 24.00 Inches)

OWNERSHIP OF DRAWINGS THIS DOCUMENT AND THE IDEAS AND DESIGNS INCORPORATED HEREIN, AS AN INSTRUMENT OF PROFESSIONAL SERVICES, IS THE PROPERTY OF ARCHITECTURAL ALLIANCE INCORPORATED AND IS NOT TO BE USED, IN WHOLE OR IN PART, FOR ANY OTHER PROJECT WITHOUT THE WRITTEN AUTHORIZATION OF ARCHITECTURAL ALLIANCE INCORPORATED. © COPYRIGHT 2021

Architectural Alliance Incorporated
350 Pine Street, Suite 720
Ednon Plaza
Beaumont, Texas 77701
TEL (409) 866-7196
FAX (409) 866-1745
J. ROSS CLARK, A.I.A.
RONALD M. JONES, A.I.A.
www.archtexas.com

REGISTERED ARCHITECT JAMES R. CLARK 8212 STATE OF TEXAS
8/16/2021

REGISTERED ARCHITECT RONALD M. JONES 13662 STATE OF TEXAS
8/16/2021

UNITED CHRISTIAN ACADEMY
First Pentecostal Church
10619 Highway 69
Port Arthur, TX 77642

ISSUED FOR
SCHEMATIC DESIGN X
DATE: 10/6/2020
DESIGN DEVELOPMENT X
DATE: 3/5/2021
BIDS & CONSTRUCTION X
DATE: 8/2/2021
REVISION:
DATE:
REVISION:
DATE:
REVISION:
DATE:

DRAWINGS SHEET TITLE
ROOF PLAN

SHEET NUMBER
A900

20105
PROJECT NUMBER

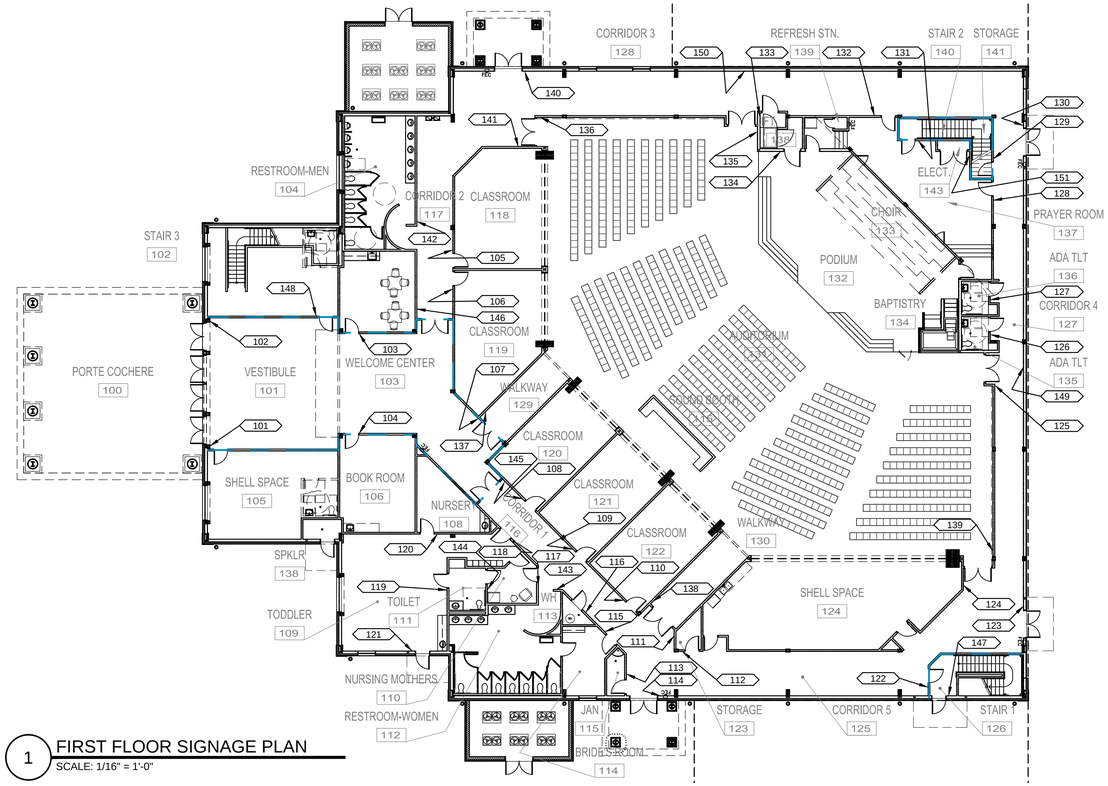

1 FIRST FLOOR SIGNAGE PLAN
SCALE: 1/16" = 1'-0"

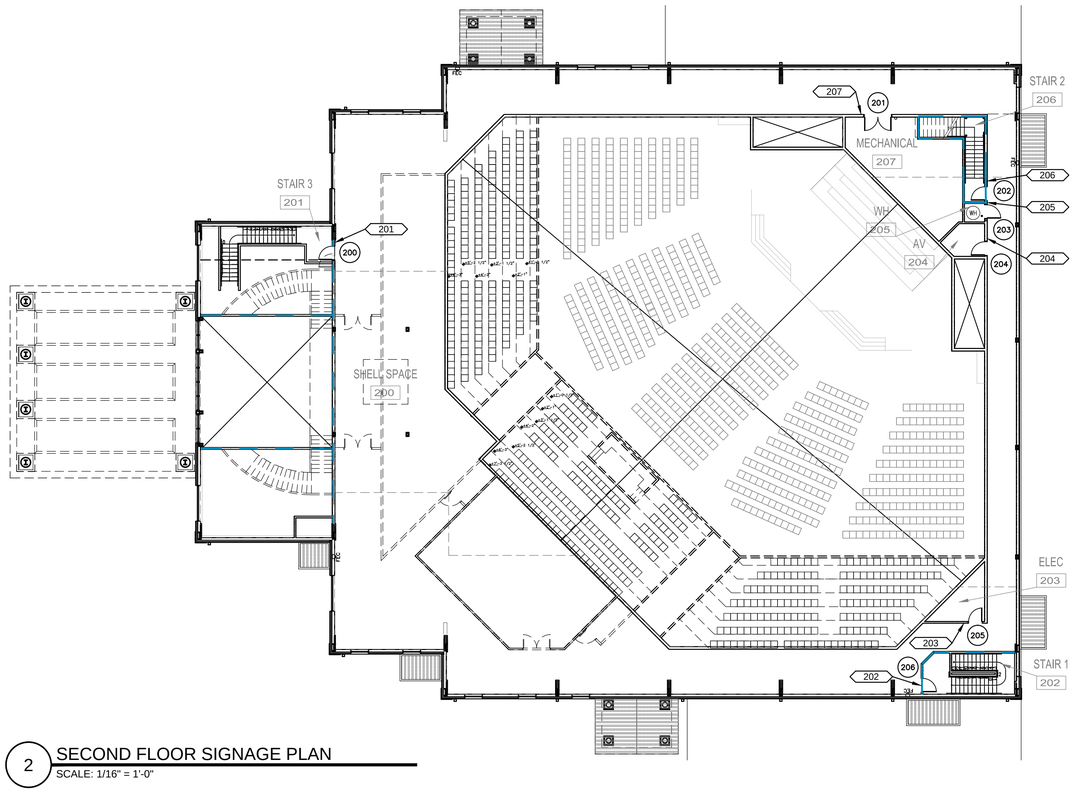

2 SECOND FLOOR SIGNAGE PLAN
SCALE: 1/16" = 1'-0"

SIGNAGE GENERAL NOTES

1. VERIFY ALL SIGNAGE WITH OWNER/ARCHITECT.
2. PROVIDE RAISED MICARTA SIGNAGE WITH 3/4" HIGH TEXT AND ADA COMPLIANT BRAILLE. VERIFY
3. ALL ROOM SIGNAGE TO BE MOUNTED 4'-0" MIN TO BOTTOM OF TACTILE CHARACTERS ABOVE FINISH FLOOR TO ADA STANDARD AS DIRECTED BY ARCHITECT.
4. ALL ROOM SIGNAGE TO BE MOUNTED WITH A CLEAR FLOOR SPACE OF 18"MINX18"MIN CENTERLINE OF TACTILE CHARACTERS, BEYOND THE ARC OF THE DOOR SWING TO ADA STANDARD AS DIRECTED BY ARCHITECT.
5. ALL TEXT AND COLORS TO BE VERIFIED PRIOR TO PREPARATION OF SHOP DRAWINGS.
6. PROVIDE SCALED LAYOUT OF ALL SIGNAGE.
7. BRAILLE TEXT SHOWN FOR GRAPHIC REPRESENTATION PURPOSES ONLY, VERIFY CORRECT TEXT.

3 SIGNAGE GENERAL NOTES
SCALE: NTS

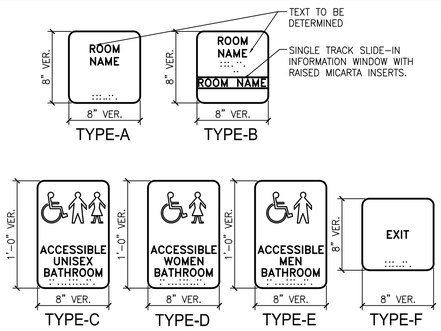

4 SIGNAGE TYPES
SCALE: 1 1/2"=1'-0"

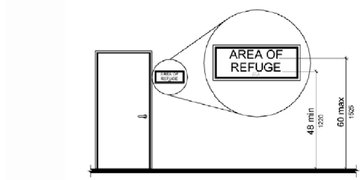

Figure 703.4.1 Height of Tactile Characters Above Finish Floor or Ground

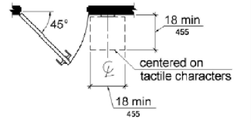

Figure 703.4.2 Location of Tactile Signs at Doors

5 SIGNAGE PLACEMENT DETAIL
SCALE: NTS EXCERPT FROM TAS 2012

SIGNAGE SCHEDULE

DOOR NO.	SIGN TYPE	SIGN NO.	SIGN TEXT (VERIFY TEXT WITH OWNER)	DOOR NO.	SIGN TYPE	SIGN NO.	SIGN TEXT (VERIFY TEXT WITH OWNER)
01	F	101	EXIT	52	A	132	PRAYER ROOM
04	F	102	EXIT	48	A	133	WHEELCHAIR LIFT
13	A	103	WELCOME CENTER	49	A	134	WHEELCHAIR LIFT
39	A	104	BOOK ROOM	18	F	135	EXIT
16	B	105	CLASSROOM	17	F	136	EXIT
15	B	106	CLASSROOM	43	F	137	EXIT
43	A	107	SANCTUARY	47	F	138	EXIT
44	B	108	CLASSROOM	24	F	139	EXIT
45	B	109	CLASSROOM	05	F	140	EXIT
46	B	110	CLASSROOM	17	A	141	SANCTUARY
47	A	111	SANCTUARY	–	E	142	MEN BATHROOM
28	A	112	STORAGE	–	D	143	WOMEN BATHROOM
29	A	113	JANITOR	35	C	144	BATHROOM
09	F	114	EXIT	42	F	145	EXIT
30	A	115	BRIDE'S ROOM	14	F	146	EXIT
31	A	116	MECHANICAL	08	F	147	EXIT
33	A	117	NURSING MOTHERS	12	F	148	EXIT
38	A	118	TODDLERS	23	F	149	EXIT
36	C	119	TOILET	18	F	150	EXIT
37	A	120	NURSERY	61	A	151	ELECTRICAL
10	F	121	EXIT	200	F	201	EXIT
26	A	122	STAIR 1	206	F	202	EXIT
07	F	123	EXIT	205	A	203	ELECTRICAL
24	A	124	SANCTUARY	204	A	204	A/V EQUIPMENT
23	A	125	SANCTUARY	203	A	205	MECHANICAL
22	C	126	BATHROOM	202	A	206	STAIR 2
21	F	127	EXIT	201	A	207	MECHANICAL
19	A	128	PRAYER ROOM				
54	A	129	STORAGE				
06	F	130	EXIT				
53	A	131	STAIR 2				

Architectural Alliance Incorporated
350 Pine Street, Suite 720
Ellison Plaza
Beaumont, Texas 77701
TEL (409) 866-7196
FAX (409) 866-1745
J. ROSS CLARK, A.I.A.
RONALD M. JONES, A.I.A.
www.archtectall.com

REGISTERED ARCHITECT JAMES R. CLARK 8212 STATE OF TEXAS
8/16/2021

REGISTERED ARCHITECT RONALD M. JONES 13662 STATE OF TEXAS
8/16/2021

UNITED CHRISTIAN ACADEMY
First Pentecostal Church
10619 Highway 69
Port Arthur, TX 77642

ISSUED FOR
SCHEMATIC DESIGN X
DATE: 10/6/2020
DESIGN DEVELOPMENT X
DATE: 3/5/2021
BIDS & CONSTRUCTION X
DATE: 8/2/2021
REVISION:
DATE:
REVISION:
DATE:
REVISION:
DATE:

DRAWINGS SHEET TITLE
SIGNAGE PLAN

SHEET NUMBER
SN101

20105
PROJECT NUMBER

SAVED: MICHAELM
PLOT: LEO TAN
PLOT DATE: 8/16/2021 2:07 PM
SHEET SIZE: ARCH expand D (36.00 x 24.00 Inches)

OWNERSHIP OF DRAWINGS THIS DOCUMENT AND THE IDEAS AND DESIGNS INCORPORATED HEREIN, AS AN INSTRUMENT OF PROFESSIONAL SERVICES, IS THE PROPERTY OF ARCHITECTURAL ALLIANCE INCORPORATED AND IS NOT TO BE USED, IN WHOLE OR IN PART, FOR ANY OTHER PROJECT WITHOUT THE WRITTEN AUTHORIZATION OF ARCHITECTURAL ALLIANCE INCORPORATED. © COPYRIGHT 2021

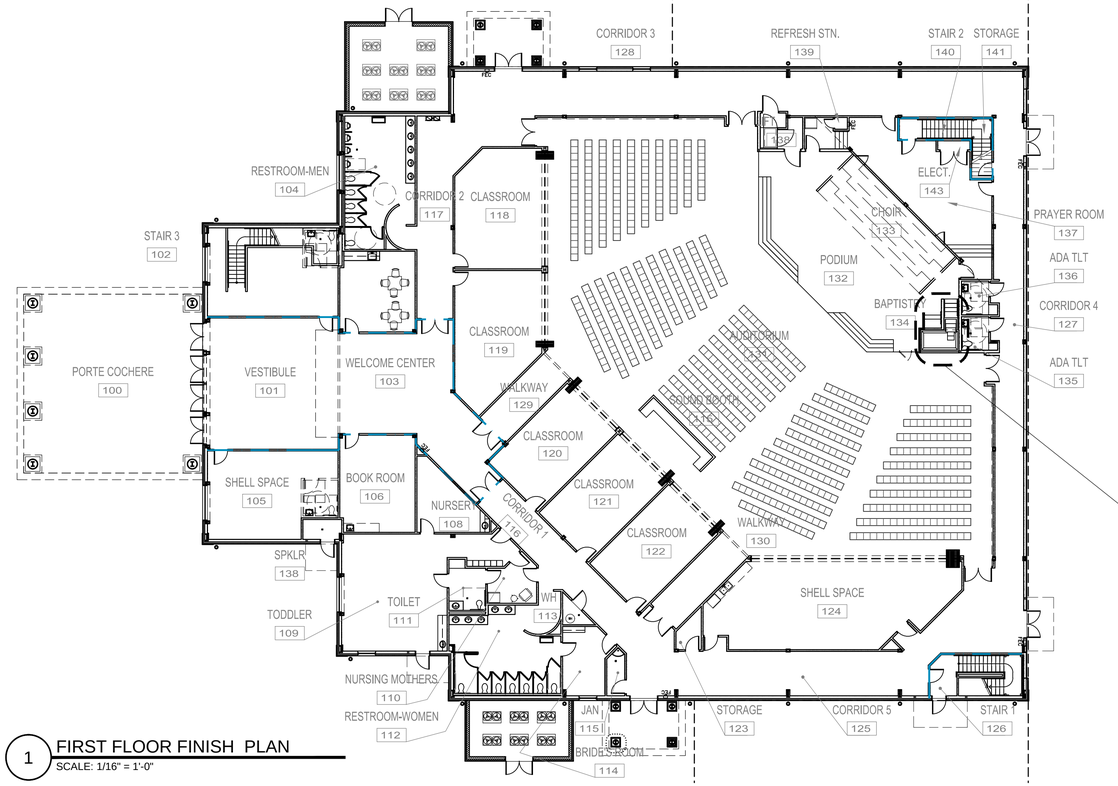

1 FIRST FLOOR FINISH PLAN
SCALE: 1/16" = 1'-0"

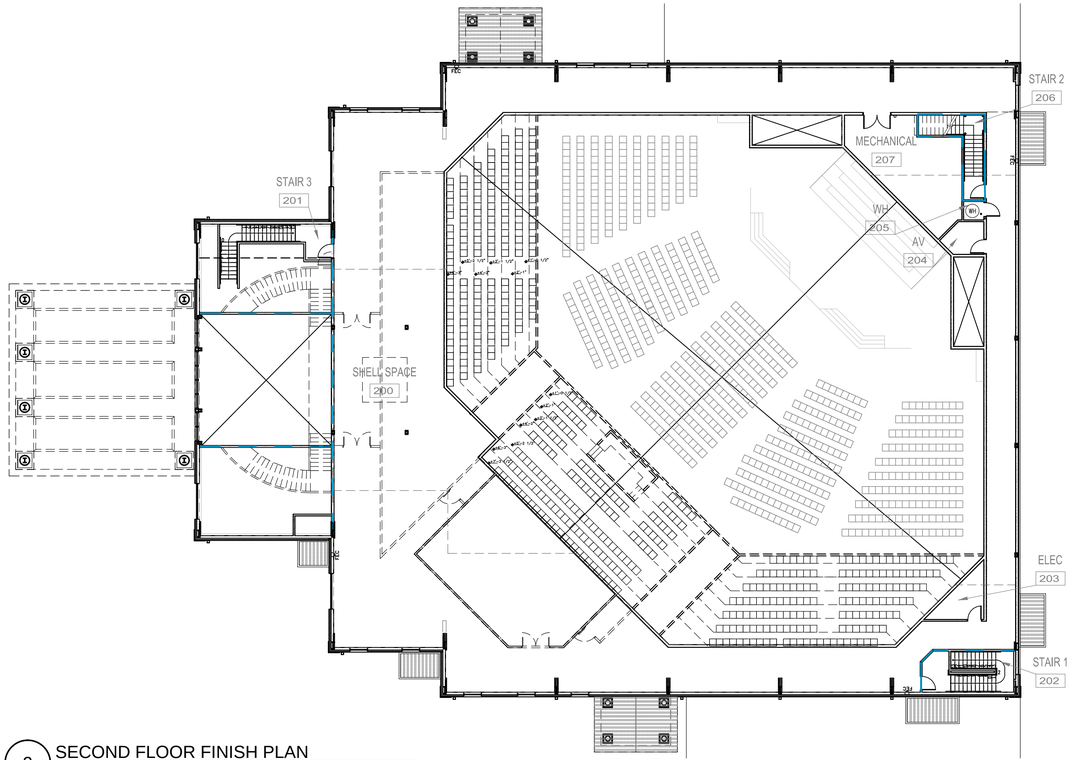

2 SECOND FLOOR FINISH PLAN
SCALE: 1/16" = 1'-0"

FIRST FLOOR ROOM FINISH SCHEDULE

RM No.	ROOM NAME	FLOOR	BASE	WALLS				CEILING		NOTES
				N	S	E	W	MATL	HEIGHT	
100	PORTE COCHERE	--	--	--	--	--	--	--	25'-6"	--
101	VESTIBULE	F1	B1	W1	W1	W1	W1	C1	23'-0"	--
102	STAIR 3	F4	B1	W1	W1	W1	W1	C1	23'-0"	--
103	WELCOME CENTER	F1	B1	W1	W1	W1	--	C1	9'-0"	--
104	RESTROOM-MEN	F5	B2	W3	W2	W3	W3	C1	9'-0"	--
105	SHELL SPACE	F3	--	W6	W6	W6	W6	C3	VARIES	--
106	BOOK ROOM	F1	B1	W1	W1	W1	W1	C1	9'-0"	--
108	NURSERY	F1	B1	W1	W1	W1	W1	C1	9'-0"	--
109	TODDLER	F1	B1	W1	W1	W1	W1	C1	9'-0"	--
110	NURSING MOTHERS	F1	B1	W1	W1	W1	W1	C1	8'-6"	--
111	TOILET	F5	B2	W3	W3	W3	W3	C1	9'-0"	--
112	RESTROOM-WOMEN	F5	B2	W3	W3	W2	W3	C1	9'-0"	--
113	WH	F3	B1	W1	W1	W1	W1	C1	9'-0"	--
114	BRIDE'S ROOM	F1	B1	W1	W1	W1	W1	C1	9'-0"	--
115	SOUND BOOTH	F6	B1	W1	W1	W1	W1	C1	8'-6"	--
115	JAN	F5	B2	W3	W3	W3	W3	C1	VARIES	--
116	CORRIDOR 1	F1	B1	W1	W1	W1	W1	C1	9'-0"	--
117	CORRIDOR 2	F1	B1	W1	W1	W1	W1	C1	9'-0"	--
118	CLASSROOM	F6	B1	W1	W1	W1	W1	C1	11'-0"	--
119	CLASSROOM	F6	B1	W1	W1	W1	W1	C1	11'-0"	--
120	CLASSROOM	F6	B1	W1	W1	W1	W1	C1	11'-0"	--
121	CLASSROOM	F6	B1	W1	W1	W1	W1	C1	11'-0"	--
122	CLASSROOM	F6	B1	W1	W1	W1	W1	C1	11'-0"	--
123	STORAGE	F1	B1	W1	W1	W1	W1	C1	8'-6"	--
124	SHELL SPACE	F6	B1	W1	W1	W1	W1	C1	11'-0"	--
125	CORRIDOR 5	F1	B1	W1	W1	W1	W1	C1	9'-0"	--
126	STAIR 1	F4	B1	W1	W1	W1	W1	C1	11'-0"	--
127	CORRIDOR 4	F1	B1	W1	W1	W1	W1	C1	9'-0"	--
128	CORRIDOR 3	F1	B1	W1	W1	W1	W1	C1	9'-0"	--
129	WALKWAY	F6	B1	W1	W1	W1	W1	C1	11'-0"	--
130	WALKWAY	F6	B1	W1	W1	W1	W1	C1	11'-0"	--
131	AUDITORIUM	F6	B1	W1	W1	W1	W1	C2	VARIES	--
132	PODIUM	F6	B1	W1	W1	W1	W1	C2	VARIES	--
133	CHOIR	F6	B1	W1	W1	W1	W1	C2	VARIES	--
134	BAPTISTRY	F4	B1	W4	W4	W4	W4	C5	VARIES	--
135	ADA TLT	F5	B2	W3	W3	W3	W3	C1	9'-0"	--
136	ADA TLT	F5	B2	W3	W3	W3	W3	C1	9'-0"	--
137	PRAYER ROOM	F1	B1	W1	W1	W1	W1	C1	9'-0"	--
138	SPKLR	F3	B1	W5	W5	W5	W5	C7	23'-0"	--
139	REFRESH STN.	F6	B1	W1	W1	W1	W1	C1	9'-0"	--
140	STAIR 2	F4	B1	W1	W1	W1	W1	C1	23'-0"	--
141	STORAGE	F1	B1	W1	W1	W1	W1	C4	8'-6"	--
142	LIFT	F1	B1	W1	W1	W1	W1	C4	11'-0"	--
143	ELECT.	F3	B1	W6	W6	W6	W6	C1	9'-0"	--

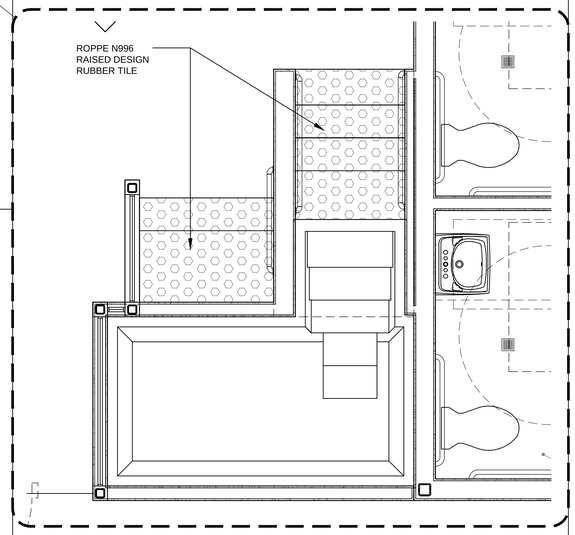

SECOND FLOOR ROOM FINISH SCHEDULE

RM No.	ROOM NAME	FLOOR	BASE	WALLS				CEILING		NOTES
				N	S	E	W	MATL	HEIGHT	
200	SHELL SPACE	F3	B1	W1	W1	W1	W1	C6	9'-0"	--
201	STAIR 3	F4	B1	W1	W1	W1	W1	C6	9'-0"	--
202	STAIR 1	F4	B1	W1	W1	W1	W1	C6	9'-0"	--
203	ELEC	F3	B1	W6	W6	W6	W6	C6	9'-0"	--
204	AV	F3	B1	W1	W1	W1	W1	C6	9'-0"	--
205	WH	F3	B1	W1	W1	W1	W1	C6	9'-0"	--
206	STAIR 2	F4	B1	W1	W1	W1	W1	C6	9'-0"	--
207	MECHANICAL	F3	B1	W5	W5	W5	W5	C7	25'-0"	--

ROOM FINISH LEGEND

FLOOR
- F1 LUXURY VINYL TILE
- F2 NOT USED
- F3 SEALED CONCRETE
- F4 ROPPE 996 RAISED DESIGN RUBBER TILE, #96 TREAD AND RISER WITH GLOW STRIP
- F5 CROSSVILLE COLOR BLOX 12X12 PORCELAIN TILE PRICE LEVEL II COLOR:TBD
- F6 CARPET COLOR:TBD

BASE
- B1 4" ROPPE RUBBER BASE
- B2 CROSSVILLE COLOR BLOX 6X12 TILE BASE PRICE LEVEL II COLOR:TBD

WALL
- W1 TAPE TEXTURE AND PAINT WALLS. LEVEL 5 FINISH
- W2 CROSSVILLE COLOR BLOX 12X24 PORCELAIN TILE PRICE LEVEL II COLOR:TBD
- W3 CROSSVILLE COLOR BLOX 12X24 PORCELAIN TILE WAINSCOT WITH 4X12 BULLNOSE PRICE LEVEL II COLOR:TBD
- W4 TAPE TEXTURE AND PAINT WALLS. LEVEL 5 FINISH. MOISTURE RESISTANT GYP. BD.
- W5 FIRE TAPE MOISTURE RESISTANT GYPSUM BOARD
- W6 FIRE TAPE GYPSUM BOARD

CEILING
- C1 ARMSTRONG 2X2 #1810 FINE FISSURED ACOUSTICAL CEILING TILES IN 15/16 GRID (UL # G526)
- C2 EXPOSED STRUCTURE PAINTED BLACK.
- C3 EXPOSED STRUCTURE
- C4 TAPE TEXTURE AND PAINT GYP. BD. CEILINGS
- C5 SAME AS C4 EXCEPT MOISTURE RESIST. GYP. BD.
- C6 SAME AS C1 EXCEPT NON-RATED
- C7 FIRE TAPE MOISTURE RESISTANT GYPSUM BOARD

PLASTIC LAMINATE
- PL-1 PLASTIC LAMINATE COUNTERTOPS
- PL-2 PLASTIC LAMINATE CABINETS

Architectural Alliance Incorporated
350 Pine Street, Suite 720
Ednoo Plaza
Beaumont, Texas 77701
TEL (409) 866-7196
FAX (409) 866-1745
J. ROSS CLARK, A.I.A.
RONALD M. JONES, A.I.A.
www.archtexas.com

REGISTERED ARCHITECT JAMES R. CLARK 8212 STATE OF TEXAS
8/16/2021

REGISTERED ARCHITECT RONALD M. JONES 13662 STATE OF TEXAS
8/16/2021

UNITED CHRISTIAN ACADEMY
First Pentecostal Church
10619 Highway 69
Port Arthur, TX 77642

ISSUED FOR
- SCHEMATIC DESIGN [X] DATE: 10/6/2020
- DESIGN DEVELOPMENT [X] DATE: 3/5/2021
- BIDS & CONSTRUCTION [X] DATE: 8/2/2021
- REVISION: DATE:
- REVISION: DATE:
- REVISION: DATE:

DRAWINGS SHEET TITLE
FINISH SCHEDULE

SHEET NUMBER
F101

20105
PROJECT NUMBER

SAVED: MICHAELM
PLOT: LEO TAN
PLOT DATE: 8/16/2021 2:08 PM
SHEET SIZE: ARCH expand D (36.00 x 24.00 Inches)

OWNERSHIP OF DRAWINGS THIS DOCUMENT AND THE IDEAS AND DESIGNS INCORPORATED HEREIN, AS AN INSTRUMENT OF PROFESSIONAL SERVICES, IS THE PROPERTY OF ARCHITECTURAL ALLIANCE INCORPORATED AND IS NOT TO BE USED, IN WHOLE OR IN PART, FOR ANY OTHER PROJECT WITHOUT THE WRITTEN AUTHORIZATION OF ARCHITECTURAL ALLIANCE INCORPORATED. © COPYRIGHT 2021